SINGLE PHASE ON-GRID PV INVERTER

PV-3000N-V & PV-5000W-V & PV-5000W-HV

Installation & Operation Manual

Ver. 1.0 (EN) NOV. 2017

Printed on Recycled Paper

1. Safety Precautions

Before beginning your journey, please read the following safety instructions carefully.

Qualified Personnel ONLY!

Only Qualified technicians shall install or service unit(s) in accordance with local wiring regulations.

PV Modules ONLY!

Designed for PV and solar power conversion only; do not use for other DC sources or conversion purposes.

Hot Surface

Metallic parts of enclosure may be hot during operation.

Recycle

Do not throw this electronic device in a trash dumpster when being disposed of. To minimize pollution of environment, please consult your local service provider.

45 minutes

Danger!

High voltage inside inverter can cause Electric shock, even when inverter is not operating. Wait for at least 45 minutes before opening the enclosure.

2. Contact Information

Asian Power Devices Inc.
(Trade mark: PrimeVOLT)

TEL: +886-2-2695-5388

FAX:+886-2-2693-1009

ADD: 11F., No.211, Nanyang St., Xizhi Dist.,New Taipei City 221, TAIWAN

Official Website: http://www.primevolt.com

3. Warranty Information

Warranty or liability will be void if damage caused by, but not limited to the following:

1. Unauthorized opening of unit
2. Installation faults such as improper environment, wiring and applications
3. Working conditions beyond specified
4. Improper operation of unit
5. Violation of safety instructions in this manual
6. Damage during transportation
7. Any internal modifications
8. Replacing or installation of unauthorized software
9. Unforeseen calamity or force majeure

Table of Contents

1. Safety Precautions 1
2. Contact Information 2
3. Warranty Information 3
4. PV System 5
5. Product Overview 6
6. Installation 10
6.1 Assembly Chart 12
6.2 Choosing Proper Installation Site 13
6.3 Mounting Properly 14
6.4 Mounting Procedure 15
6.5 Wire Connections 17
6.6 Ready to Start 27
7. Operation (S-Series) 29
7.1 Overview 29
7.2 Setting Clock 30
7.3 Status LED 32
7.4 Frames 32
7.5 Network and Internet 36
7.6 Browsing Inverter Web Page 37
7.7 Using USB 42
8. Operation (ES-Series) 44
9. RS485 49
9.1 About RS485 49
9.2 Connecting RS485 49
10. Connecting to Ripple Control Receiver (RCR) 51
11. Maintenance 53
12. Troubleshooting 54
13. Specifications 55
14. Addendum 57

4. PV System

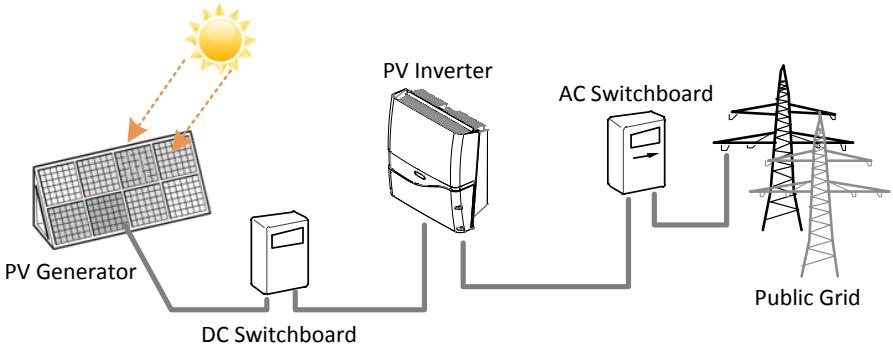

A typical PV system contains:

1. PV Generator: Receive sunlight and generate DC power
2. DC Switchboard: Links between PV panels and PV inverter, include of DC switch and surge protection
3. Inverter's DC Switch: PV Inverter with DC Switch
4. PV Inverter: Converts DC power by PV panels to AC output power for public grid
5. AC Switchboard: Links between PV inverter and public grid
6. Public Grid: Provides utility for homes

5. Product Overview

PV-3000N-V

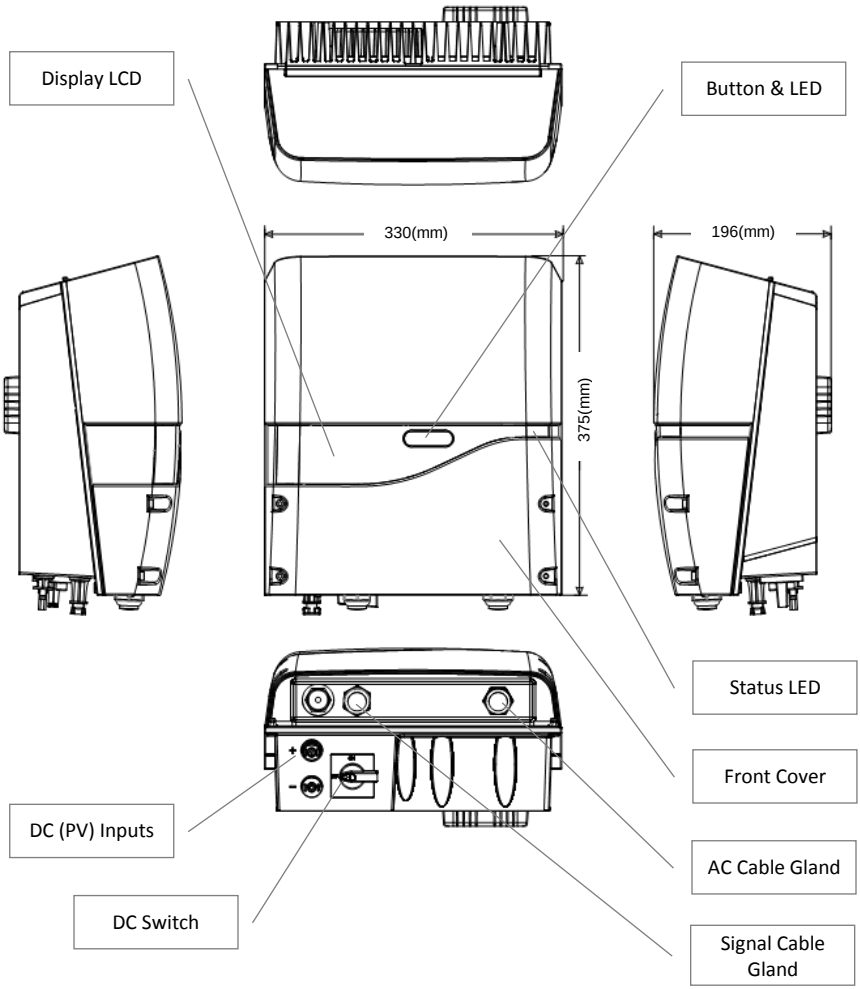

PV-5000W-V

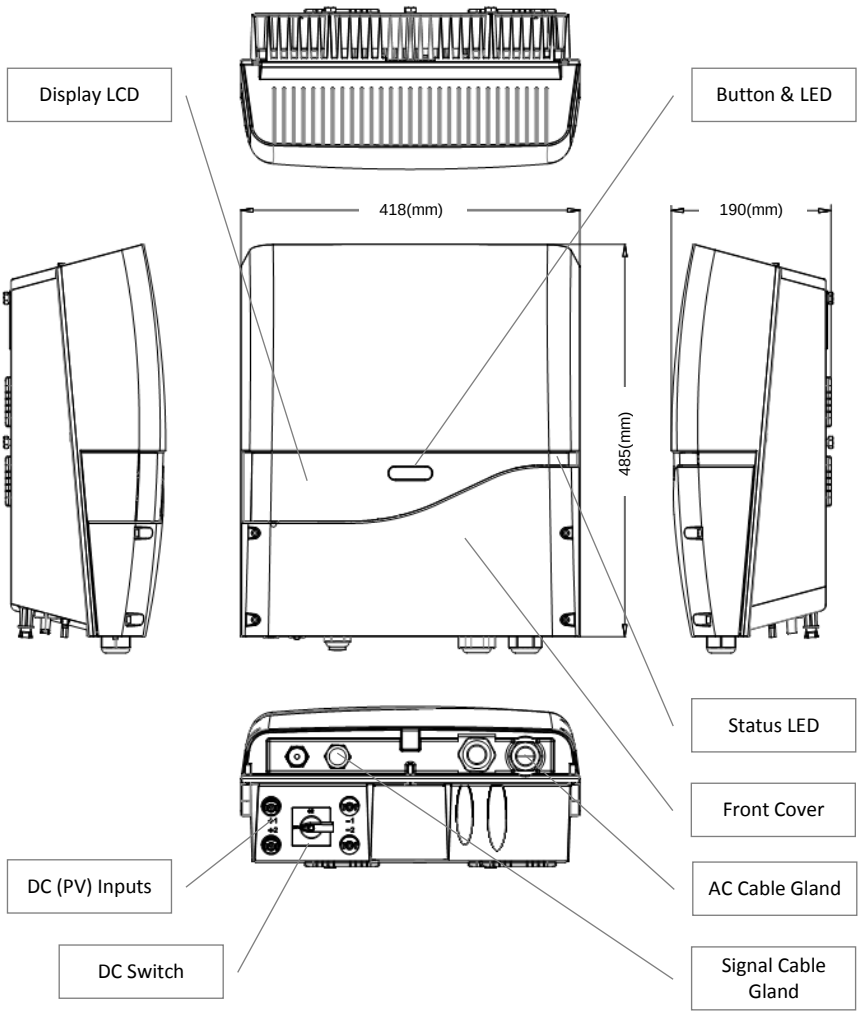
Display LCD
Button & LED
418(mm)
190(mm)
485(mm)
Status LED
Front Cover
AC Cable Gland
Signal Cable Gland
DC (PV) Inputs
DC Switch

PV-5000W-HV

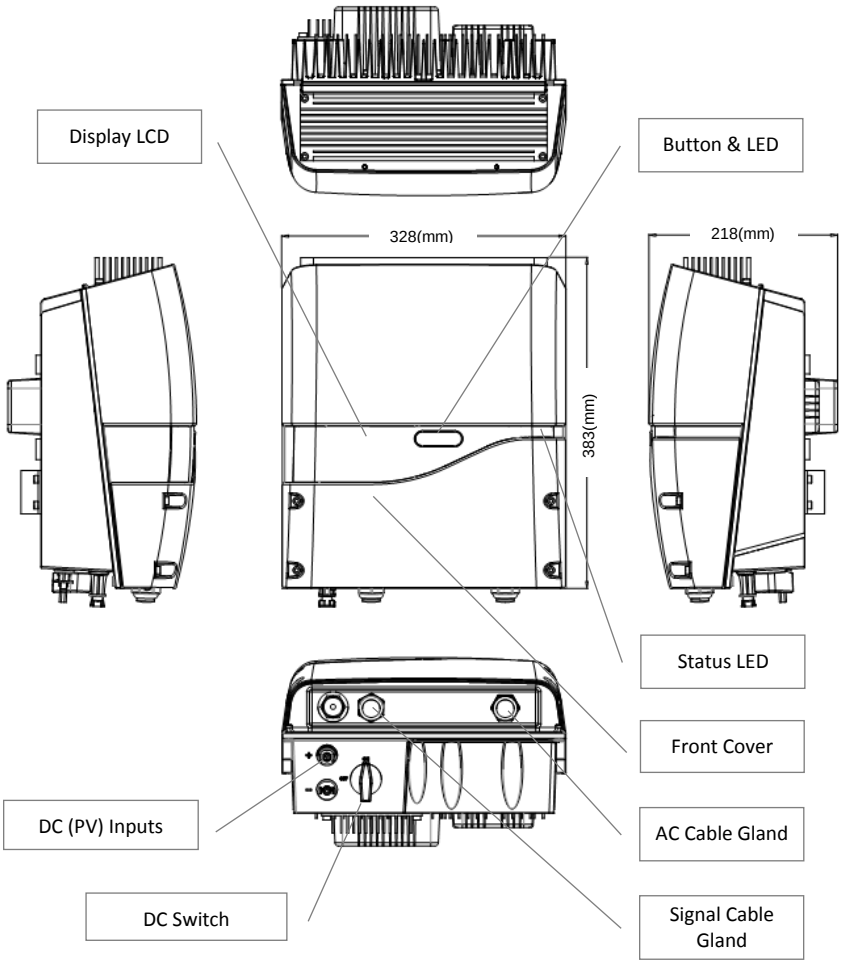
Display LCD
Button & LED
328(mm)
218(mm)
383(mm)
Status LED
Front Cover
DC (PV) Inputs
AC Cable Gland
DC Switch
Signal Cable Gland

Product Labels

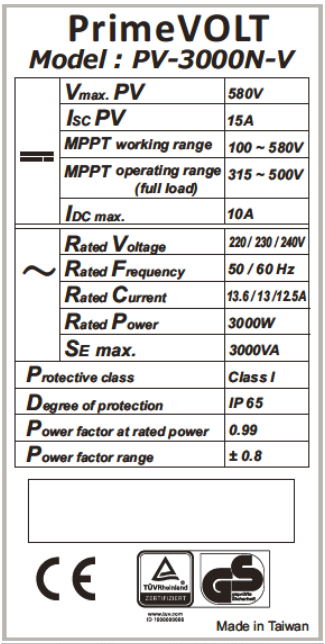

PrimeVOLT
Model : PV-3000N-V

⎓	$V_{max.}$ PV	580V
	I_{SC} PV	15A
	MPPT working range	100 ~ 580V
	MPPT operating range (full load)	315 ~ 500V
	I_{DC} max.	10A
~	Rated Voltage	220 / 230 / 240V
	Rated Frequency	50 / 60 Hz
	Rated Current	13.6 / 13 / 12.5A
	Rated Power	3000W
	SE max.	3000VA
Protective class		Class I
Degree of protection		IP 65
Power factor at rated power		0.99
Power factor range		± 0.8

Made in Taiwan

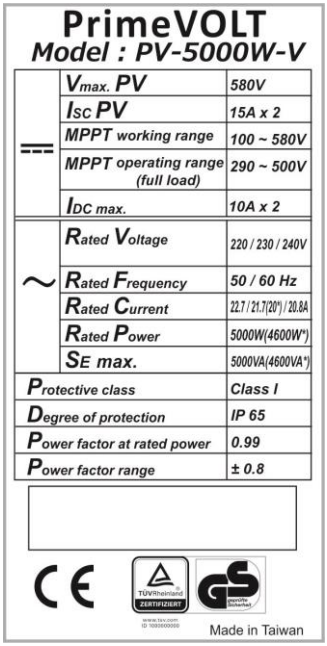

PrimeVOLT
Model : PV-5000W-V

⎓	$V_{max.}$ PV	580V
	I_{SC} PV	15A x 2
	MPPT working range	100 ~ 580V
	MPPT operating range (full load)	290 ~ 500V
	I_{DC} max.	10A x 2
~	Rated Voltage	220 / 230 / 240V
	Rated Frequency	50 / 60 Hz
	Rated Current	22.7 / 21.7(20*) / 20.8A
	Rated Power	5000W(4600W*)
	SE max.	5000VA(4600VA*)
Protective class		Class I
Degree of protection		IP 65
Power factor at rated power		0.99
Power factor range		± 0.8

Made in Taiwan

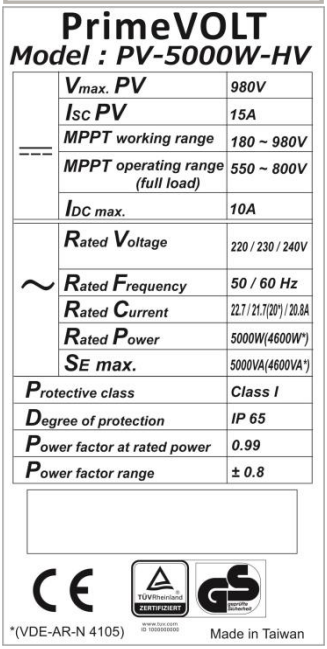

PrimeVOLT
Model : PV-5000W-HV

⎓	$V_{max.}$ PV	980V
	I_{SC} PV	15A
	MPPT working range	180 ~ 980V
	MPPT operating range (full load)	550 ~ 800V
	I_{DC} max.	10A
~	Rated Voltage	220 / 230 / 240V
	Rated Frequency	50 / 60 Hz
	Rated Current	22.7 / 21.7(20*) / 20.8A
	Rated Power	5000W(4600W*)
	SE max.	5000VA(4600VA*)
Protective class		Class I
Degree of protection		IP 65
Power factor at rated power		0.99
Power factor range		± 0.8

*(VDE-AR-N 4105)

Made in Taiwan

6. Installation

PV-3000N-V/PV-5000W-V

Ⓐ

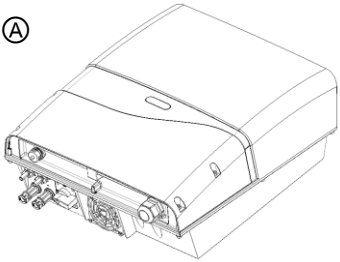

Ⓑ

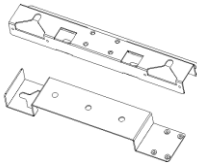

Ⓒ

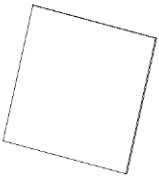

Ⓓ

Ⓔ

Ⓕ

*

Item	Description
Ⓐ	Inverter
Ⓑ	Mounting bracket kit
Ⓒ	User manual
Ⓓ	M4 flat screws × 8, used for mounting bracket
Ⓔ	Plastic anchors & screws × 3. Used to install mounting bracket on wall
Ⓕ	EMI core(s) for Ethernet cable(s) PV-3000N-V: Circular EMI cores × 2 PV-5000W-V: Clip-on EMI core × 1

PV-5000W-HV

Ⓐ

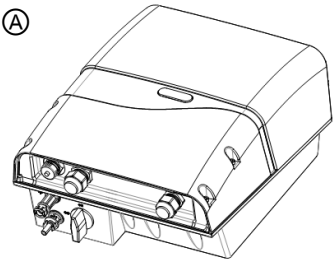

Ⓑ

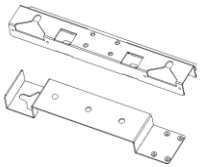

Ⓒ

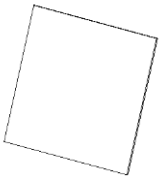

Ⓓ

Ⓔ

Item	Description
Ⓐ	Inverter
Ⓑ	Mounting bracket kit
Ⓒ	User manual
Ⓓ	M4 flat screws × 8, used for mounting bracket
Ⓔ	Plastic anchors & screws × 3. Used to install mounting bracket on wall

6.1 Assembly Chart

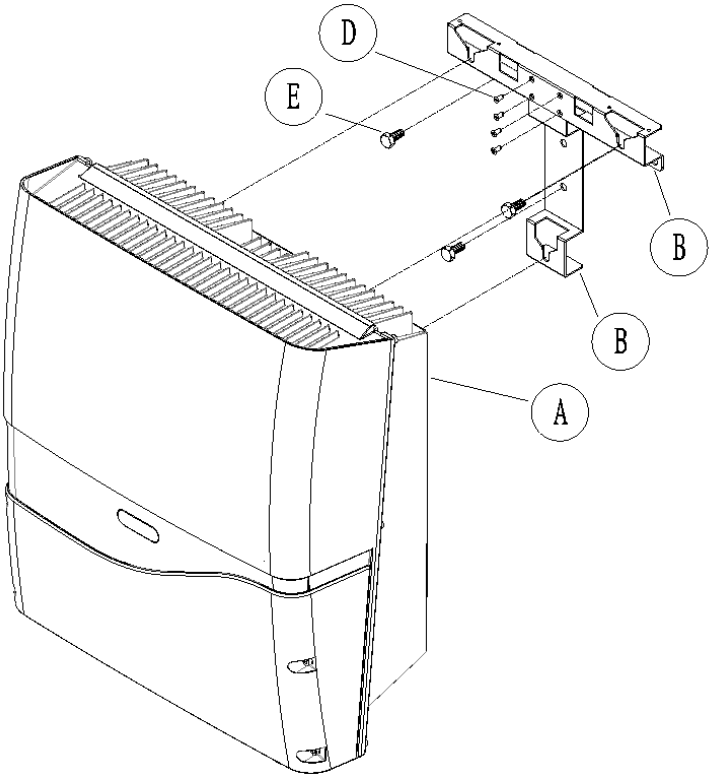

6.2 Choosing Proper Installation Site

Avoid exposing the inverter in direct sunlight or to rain.

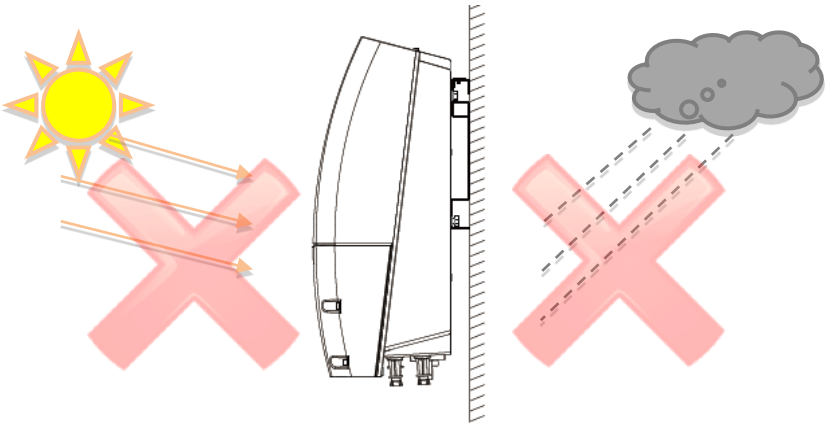

Direct Sunlight　　Direct Rain

Mount the inverter in vertical direction; tilt or horizontal mounting should be avoided.

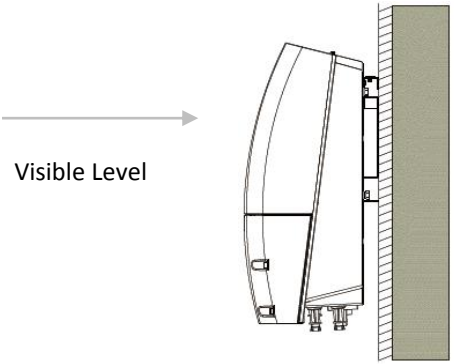

Mounting Surface	OK or NO
Concrete	OK
Metal	OK
Stone	OK
Plastics/Acrylic	No
Wood	No

6.3 Mounting Properly

- Orientation

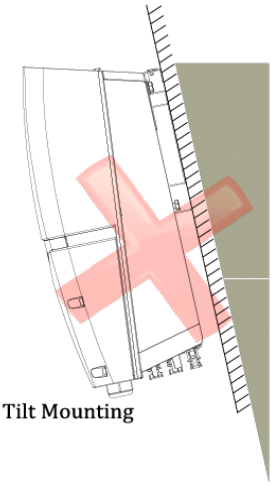

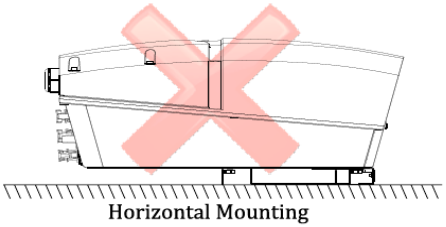

- Keeping Clearance

To retain the good cooling condition, keep each of unit over 20cm left and right, 30cm upper and down and ensure no any object is put around the units to affect the cooling.

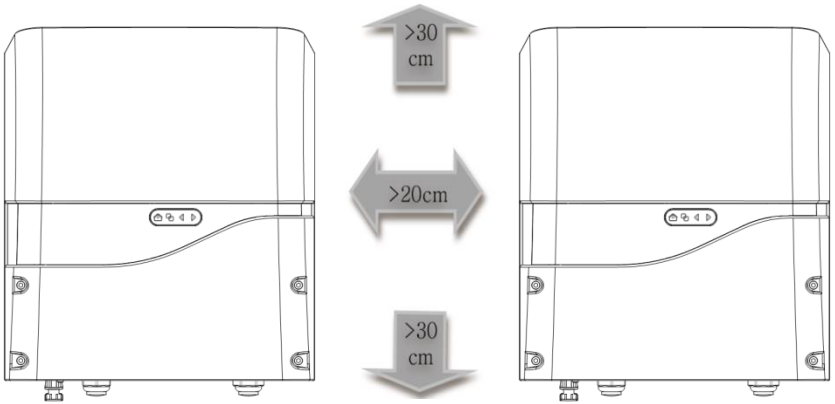

6.4 Mounting Procedure

■ Dimensions of Bracket

The bracket is used to support inverter on wall. Refer to the recommendations below to complete mounting.

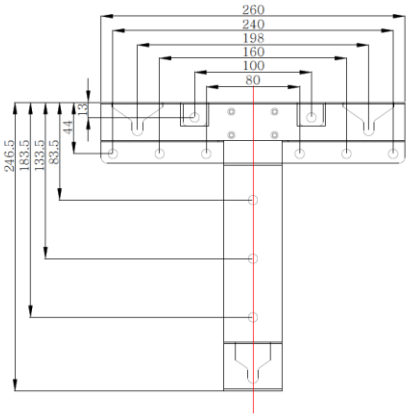

PV-3000N-V

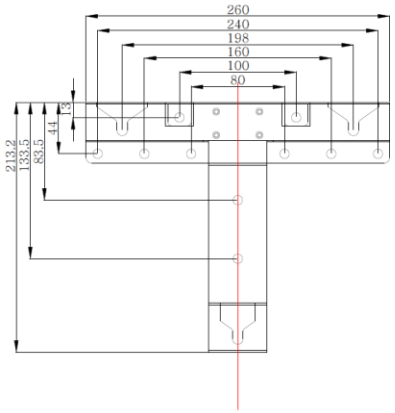

PV-5000W-V & PV-5000W-HV

■ Assembling Bracket

Before fixing on wall, assemble the bracket as below. (use M4 flat Screws x 4) item Ⓓ of accessory kit.

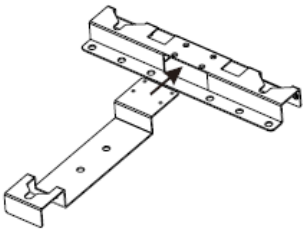

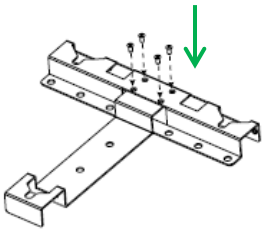

Mounting Bracket

1. Place the assembled bracket on where the inverter will be installed. Make proper drill holes and mount the assembled bracket with screws from accessory kit. (use item Ⓔ to install mounting bracket on wall).
2. For safe and firm mounting, make at least 3 drill holes in a triangular manner as demonstrated on right.
3. Use Ⓔ item (torque: 1.0-1.2Nm) to install mounting bracket on wall.

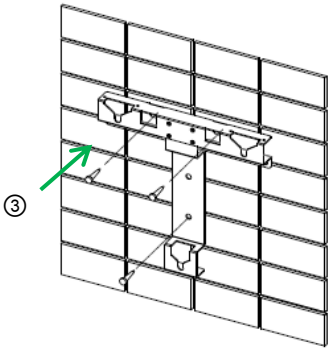

Attaching Inverter

1. Lift inverter slightly higher than bracket; Make sure all fixing points on back are at correct positions.
2. Attach inverter on bracket.
3. Hang inverter on bracket slowly.

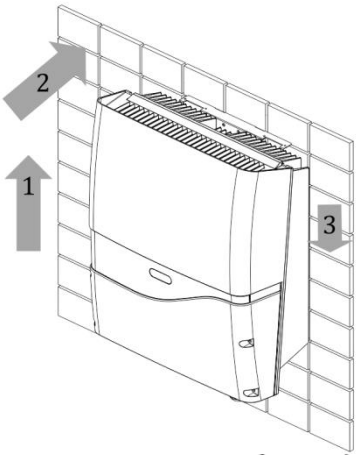

Checking

1. All supporting points are firm.
2. Lock caps are tightened with screws.
3. Inverter is well installed and secured on wall.

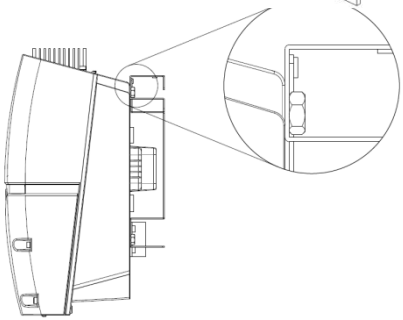

6.5 Wire Connections

- Opening Front Cover
  1. Remove the 4 screws on cover as shown on right.
  2. Take off the cover gently.

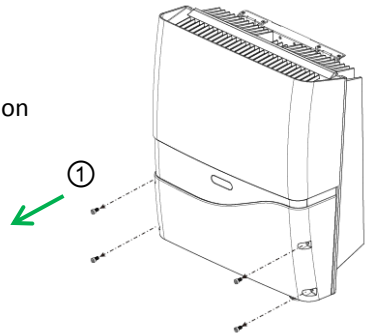

Overview of Connection Area

1. Cable Gland M25/M32 (AC cables)
2. Cable Gland M25 (Ethernet/RS485/RCR cables)
3. AC terminal block
4. RS485 terminal
5. RS485 terminal resistor switch
6. RS485 address selector
7. RJ45 port for Internet access
8. Ripple Control receiver (RCR) terminal
9. USB socket

PV-3000N-V/PV-5000W-HV

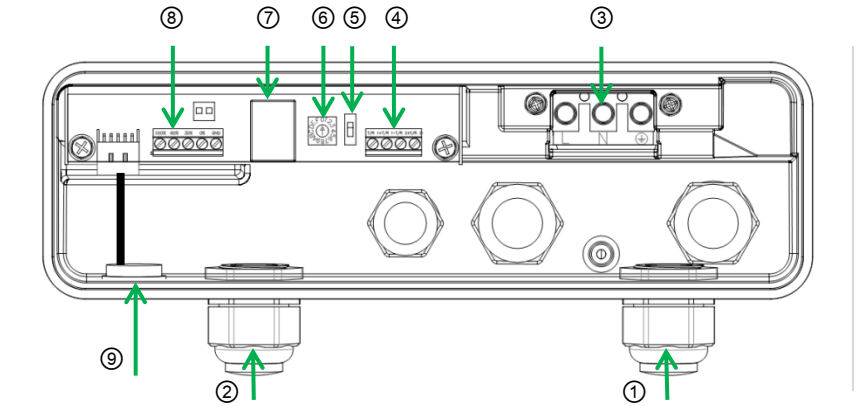

PV-5000W-V

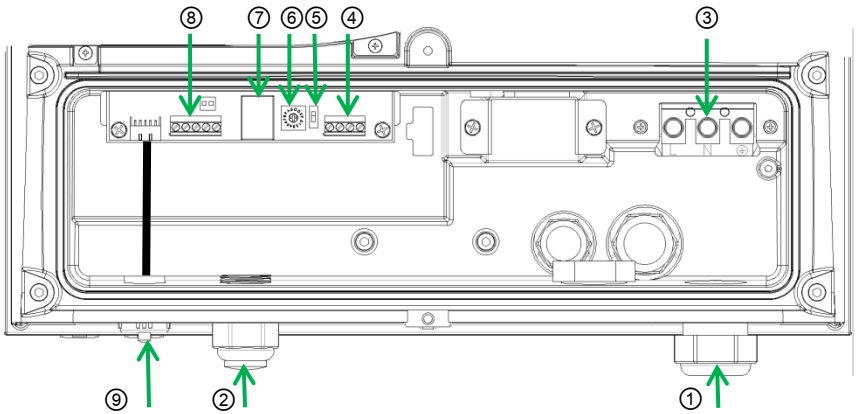

Note on AC Circuit Breakers

For safety purposes, place an independent circuit breaker between inverter and grid BEFORE all connections. Make sure inverter will be safely disconnected from the grid in all circumstances.

It is recommended to use certified 250V/20A (PV-3000N-V) or 250V/30A (PV-5000W-V & PV-5000W-HV) circuit breakers only.

AC Wiring

1. Prepare cables as recommended below

Cross Section (mm^2)	Maximum Length for 1% Loss (M)		
	PV-3000N-V	**PV-5000W-V**	**PV-5000W-HV**
1.5	6	Not proper	Not proper
2.5	9	5	5
4	14	8	8
6	19	13	13
10	Not Proper	21	21

Table above is based on single-core copper wires with maximum temperature rise of 60°C. The following factors should be taken into account when it comes to actual wiring: Ambient temperature, Wiring nearby and Cooling.

Please follow local standards if figures above are different from.

2. Remove strip insulation ~ 7 mm for PV-3000N-V
   Remove strip insulation ~ 8 mm for PV-5000W-V/PV-5000W-HV

PV-3000N-V

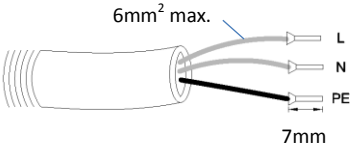

PV-5000W-V/PV-5000W-HV

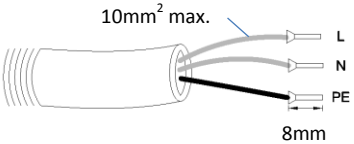

3. Remove sealing plug, twist off the AC cable gland
4. Insert AC cables through the guidance hole from rear
5. Fix L (Line), N (Neutral) and GND cables on terminal block
6. Tighten cable gland to secure cables firmly

PV-3000N-V/PV-5000W-HV

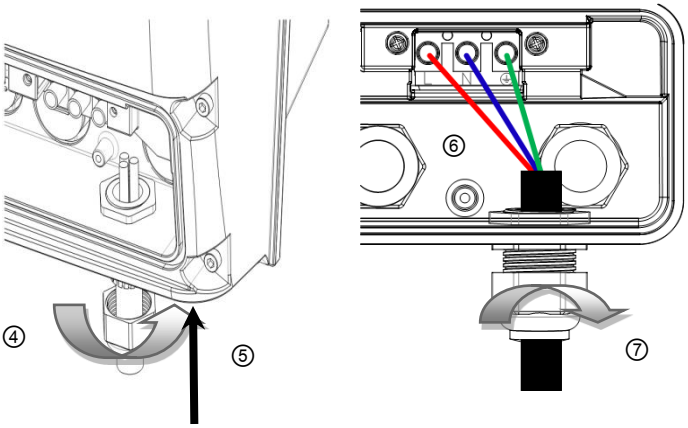

PV-5000W-V

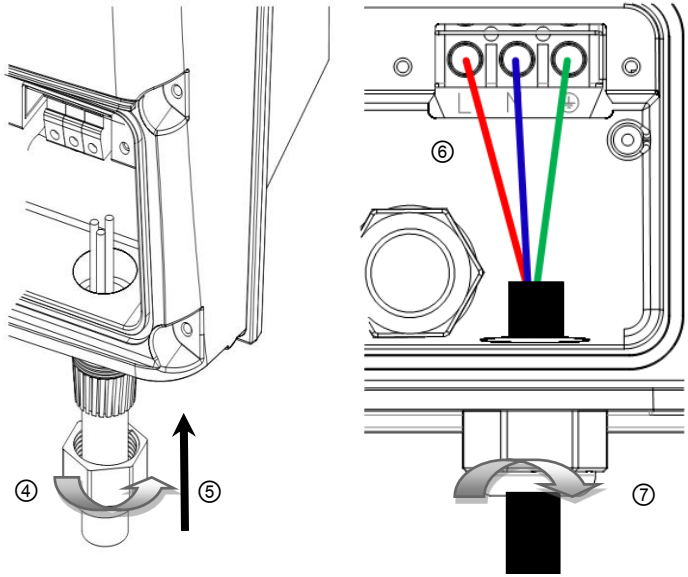

Note on Wire Selection

It is recommended to use solid cables to ensure steadfastness of cables on terminal block. If stranded wires are used, apply core-end materials enclosed in accessory kit for all sakes.

Torque Information

The torque for AC terminal is between 0.6 ~ 0.8 Nm. (PV-3000N-V) / 1.5 ~ 1.8 Nm. (PV-5000W-V/PV-5000-HV)

Ripple Control Receiver (RCR)/RS485 and RJ45 Connections

1. Remove sealing plug and twist off the cable gland (M25)
2. Insert wires from rear of guidance and holes of rubber sealing (M25)
3. Refer to Ch.9 on P.48 for proper RS485 connections
4. Refer to Ch.10 on P.51 for proper RCR connections
5. Connect RCR/RS485 and RJ45 wires as shown below
6. Make sure RJ45 wires is wound through a grey EMI core (from accessary kit), as for noise immunity
7. Tighten cable gland to secure cables firmly in position

RJ45

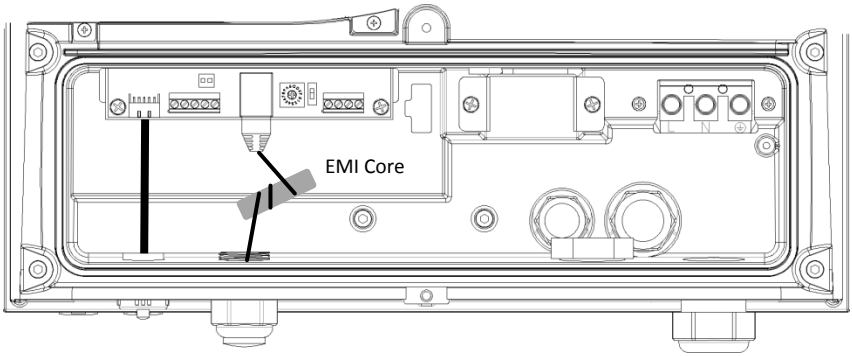

RS485 & RCR

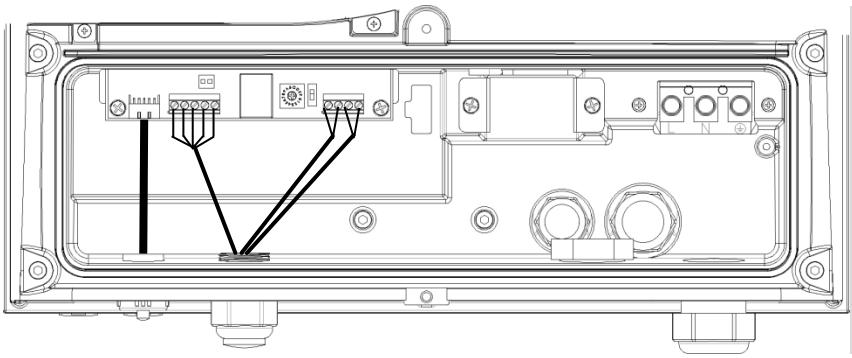

■ Closing the Front Cover

After connecting all wires, please

1. Inspect all the connections again
2. Close front cover and tighten 4 screws gently
3. Check for any openings in between front cover and inverter

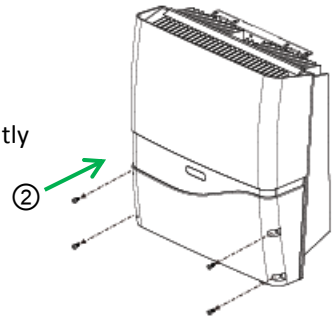

DC (PV) Wiring

1. DC Input Ratings

Model / Rating	PV-3000N-V	PV-5000W-V	PV-5000W-HV
Recommended Max. DC Power (W)	3300	5500	5500
Max. DC (V)	580	580	980
Max. Current (A)	10	10A/String 20 in Total	10
String	1	2	1

2. Use either of the following recommended connectors
    1. Wieland PST40i1C (Preferred)
    2. Multi-Contact MC4
3. Connect to PV

After all the associated cables and connectors have been prepared

1. Remove sealing plugs as depicted on right
2. Plug in PV cables gently as depicted below

PV-3000N-V/PV-5000W-HV

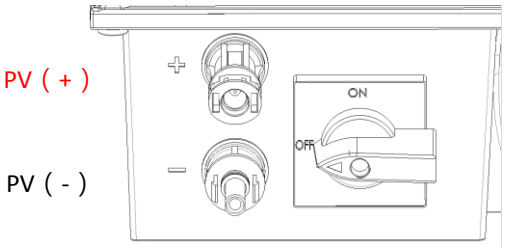

PV-5000W-V

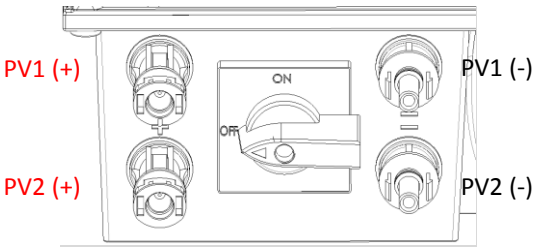

Danger of Electric Shock!

While working on DC wiring, make sure DC is completely turned off.

Polarity & Voltage Check

Before plugging in, make sure all polarities and voltages are correct. Incorrect connections could cause malfunction.

Multiple PV Connections for PV-5000W-V

You can have either 2 inputs in 1 PV string or 2 strings separately. The inverter will adjust to optimal performance accordingly by itself.

Keep the Sealing Plugs

Please keep those plugs in a safe place. You may need to use them again in case removal of DC connectors is needed.

Remind!

1. Using the 600Vdc, 15A or 16A (per string) (PV-3000N-V / PV-5000W-V), 1000Vdc, 15A or 16A (per string) (PV-5000W-HV), circuit breaker(or fuse) between PV module and PV inverter.
2. Only non-grounding PV module is applicable, user is suggested to consult with system installer for PV module type selection.
3. Require PV modules that have IEC 61730 class A rating.

Unplugging PV

In case you need to disconnect the PV, follow the steps below.

1. SWITCH OFF PV!
2. Use preferred Wieland assembling/disconnecting mounting tool PST (Art. No. 05.502.1753.0)
3. Push interlock to release plugs
4. Pull off plugs

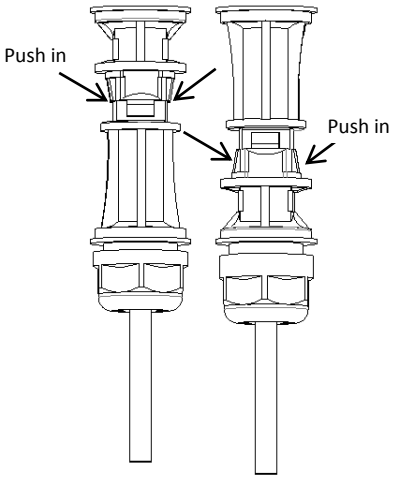

Be Sure to SWITCH OFF PV

Direct pull-off of DC plugs can lead to sparks. Be sure to switch off PV beforehand.

6.6 Ready to Start

Checklist

Before starting the inverter, please check the following items:

Item	Check Points	Checked?
Mounting	• Inverter is firmly mounted on bracket(s) • The 2 lock caps are secured • Locks are closed	
AC	• All cables are firmly fixed on terminal block • Polarities are matched • Protective Ground is available • Cable gland is tightened firmly	
RS485 RJ45 Ripple Control Receiver	• All terminals are secured • Polarities are matched • Wires are tightened by cable gland • If not used, sealing plugs are in position	
Front Cover	• Front cover is firmly attached • All screws are secured	
DC	• All plugs are firmly connected • Polarities are matched • Strings are not mixed wired (for multiple MPPT models)	

Changing Grid Connection and Operation Parameters

If you need to change grid connection settings and/or operation parameters including voltages, frequency range, power factor and power limitation, please contact your local authorized service provider for an “USB key” to do so.

Start-up Procedure

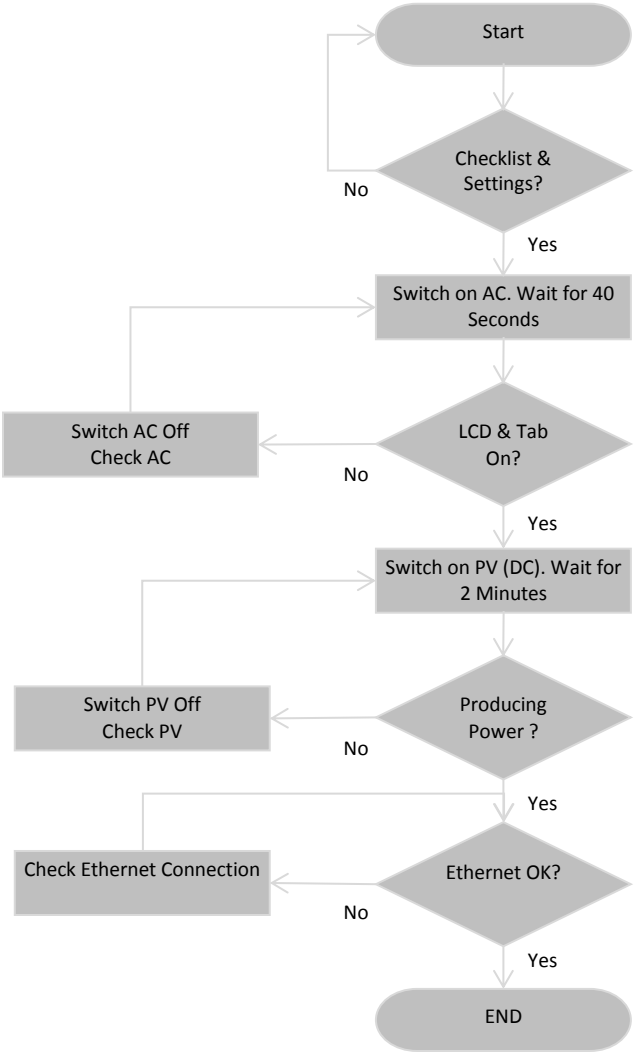

7. Operation (S-Series)

7.1 Overview

- LCD

- Icons on LCD

Icon	Description	Note
	USB. Appears when USB port in use	
	RS485. Appears when there is data transfer via RS485.	
	Wi-Fi. Appears when Wi-Fi dongle is connected. Refer to manual of Wi-Fi dongle.	
	Ethernet. Appears when Ethernet is connected.	
	Sun. Appears during daytime.	
	PV module. Appears when PV connected.	
	Utility. Appears when electrical grid is present.	
	Power feeding. Appears while inverter is feeding power to electrical grid.	

- Button

Button is used to change frame displayed on LCD screen.

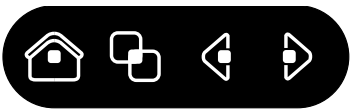

■ Icons on button

Icon	Function	Note
	Home. Returns to Home Screen.	
	Toggle. Toggles between frames for information.	
	Backward. Switches to previous daily (monthly) frame.	
	Forward. Switches to next daily (monthly) frame.	

7.2 Setting Clock

During the first installation of inverter where the internal clock has not been set, the system will automatically prompt user to set time and date.

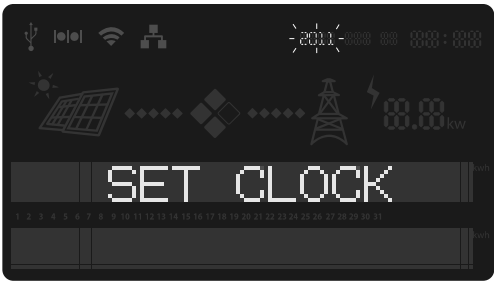

The flashing characters are the fields to be set. Use touch pad for all entries. When completed, tap to finish and confirm your new settings.

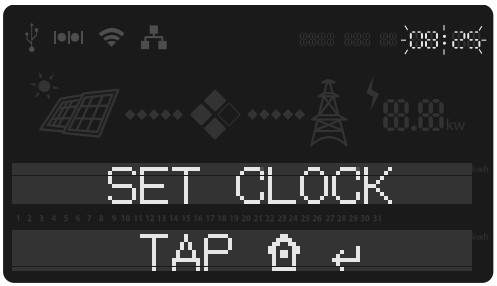

The following table depicts functions of touch pad keys.

Icon	Function	Note
	Confirms settings.	
	Switches views among *Year, Month, Day, Hour and Minute.*	
	Decreases entry value.	
	Increases entry value.	

Incorrect Clock Settings?

In case of incorrect settings, switch to “Information frame” to make adjustments afterwards.

Keeping the Clock Settings

In cases where the AC has been disconnected for more than 3.5 hours, the internal clock of inverter will roll back to factory default settings.

Self-calibration of Clock

If the inverter is connected to the Internet, the clock will synchronize with a local time server automatically. To do this, you will need to set the time zone and time server via internal web server. Please refer to later sections for details.

7.3 Status LED

This LED indicates operation status of inverter by color. In normal operation, it appears green; in circumstances where inverter goes faulty, it appears red.

Status	Indication
○	Inverter is not connected to AC.
●	Solid Green: Inverter is standing by/operating (day).
✸	Flashing Green: Inverter is standing by (evening/night).
●	Solid Red: Inverter is having a fault.

7.4 Frames

■ Operation Chart

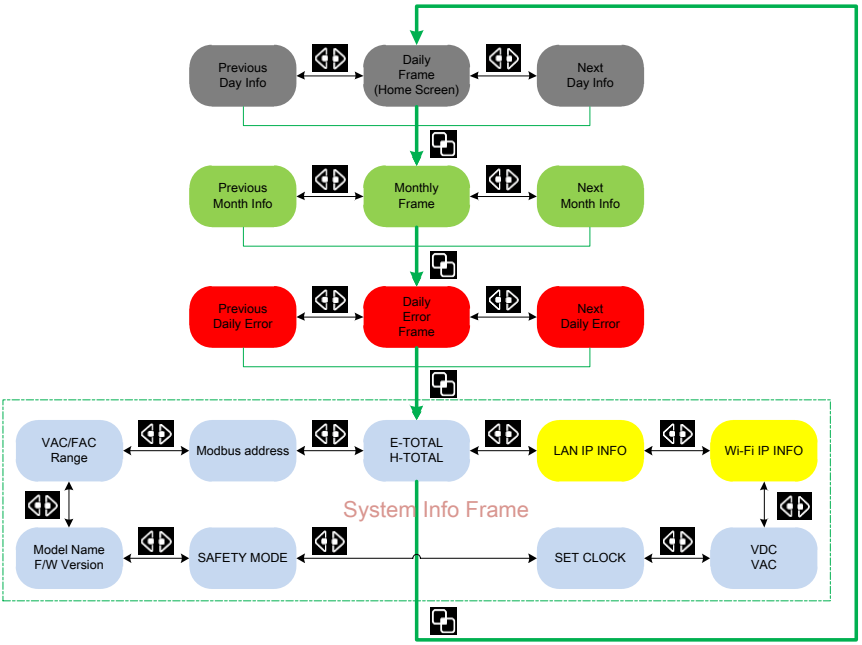

Note:

1. Tapping will go back to Home (Daily) Frame.
2. Daily Error Frame will not pop up if there have been no errors occurred during the day.
3. LAN IP and/or Wi-Fi IP will not show on screen if no Ethernet and/or Wi-Fi connected.

Home Screen & Daily Frame

The Home Screen (Daily Frame) shows the operation data of a day. The user can switch to different daily data by tapping FORWARD or BACKWORD. The date on the upper right side will change accordingly as well.

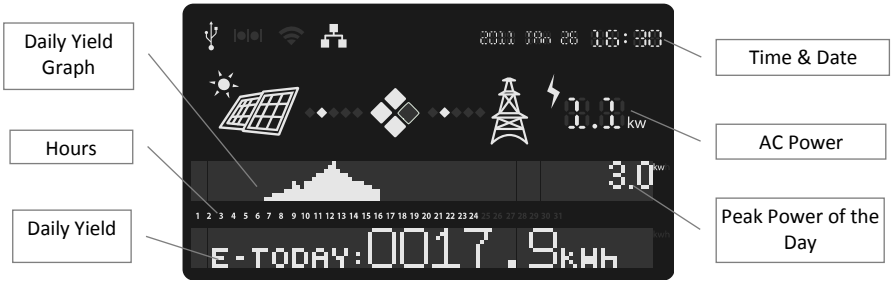

Monthly Frame

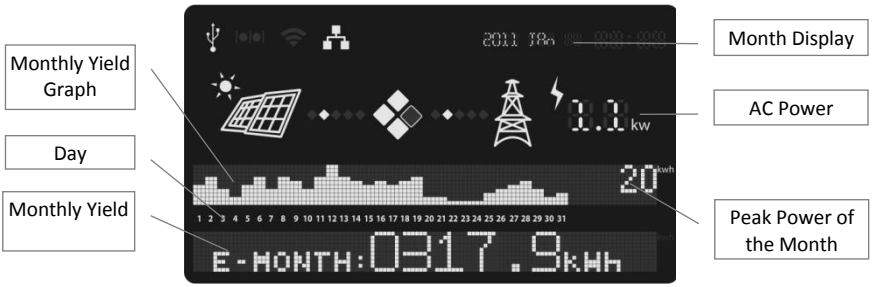

The monthly Frame shows operation data of a month. The user can view data of a different month by tapping FORWARD or BACKWORD. The month (shown on upper-right side) will change accordingly.

Daily Error Frame

This frame exists when there have been operation errors during the day.

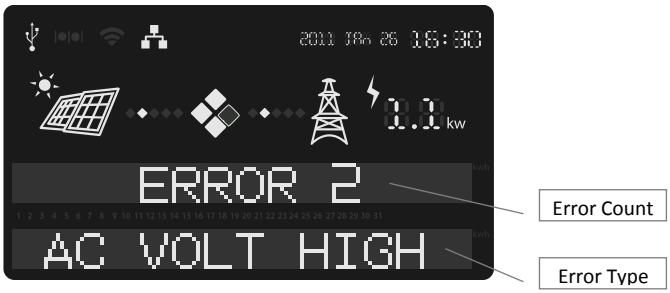

Operation Frame

This frame shows operational information of inverter. There are five sub-frames as described here.

1. E-Total & H-Total: E-Total (total accumulated energy) in kWh and H-Total (total operating time of inverter) in hours
2. LAN and Wi-Fi IP addresses: IP address information of inverter
3. Clock: To set clock, refer to Ch.7.2 Setting Clock on P.28
4. Language: Language displayed on LCD screen
5. Parameters: Safety regulations (VDE-AR-N 4105 or VDE 0126-1-1), 70% power limit status (ON/OFF) and PF adjustment (-0.8 ~ +0.8)
6. System Info: F/W version

Error Frame

An error implicates abnormal activity of the solar system. The frame pops up automatically after detection of an error. The second text line indicates error type. Error types are defined in the table below.

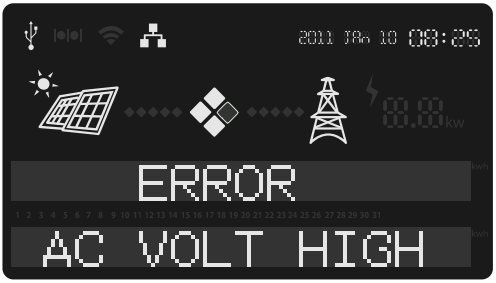

System error

Error	Implication
AC VOLT HIGH	Grid (AC) voltage is higher than preset

AC VOLT LOW	Grid (AC) voltage is lower than preset
AC FREQ HIGH	Grid frequency is higher than preset
AC FREQ LOW	Grid frequency is lower than preset
PV VOLT HIGH	PV voltage is higher than allowed
PV ISUL LOW	The insulation resistance between either PV (+) or PV (-) to earth is too low
GFCI HIGH	Ground Fault Current is higher than specified

Inverter internal error

Error	Implication
KEEP PV OFF	Internal capacitor(s) short User must switch off PV immediately
C1	High DC current detected
C2	Relay failed
C3	DC current sensor failed
C4	Internal temperature of inverter high
C5	GFCI detection failed
C7	Anti-islanding (or AFD) failed
FAN FAILS	Internal or external cooling fan failed to work

Note on "KEEP PV OFF"

If this message shows up on screen, please turn off the DC switch of PV immediately. DO NOT turn on again for any reason. Call for service immediately.

Ground Fault Alarm

In addition to showing "GFCI HIGH" on display, inverter will activate audiable alarm of the optional buzzer and show message on web page while using a computer to monitor.

7.5 Network and Internet

- Accessing Inverter via LAN (Local Area Network)

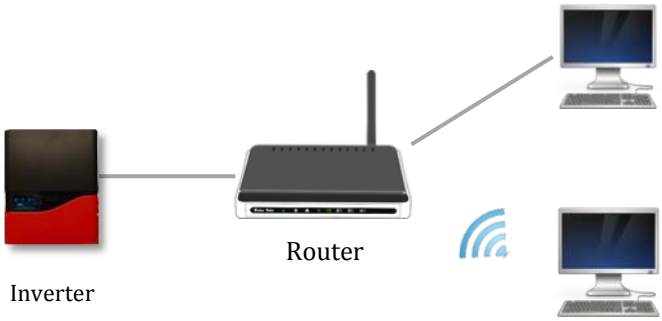

The illustration above is a typical LAN connection. The inverter and devices are connected to a router by Ethernet cable or Wi-Fi. Computers and other devices in the LAN can access inverter's data if its IP address is known.

The router, acting as a DHCP server, usually assigns an IP to the inverter automatically. You can also manually assign an IP to the inverter with the router as well. Use touch pad to go to "Operation Frame" for IP confirmation.

- Accessing Inverter via Internet

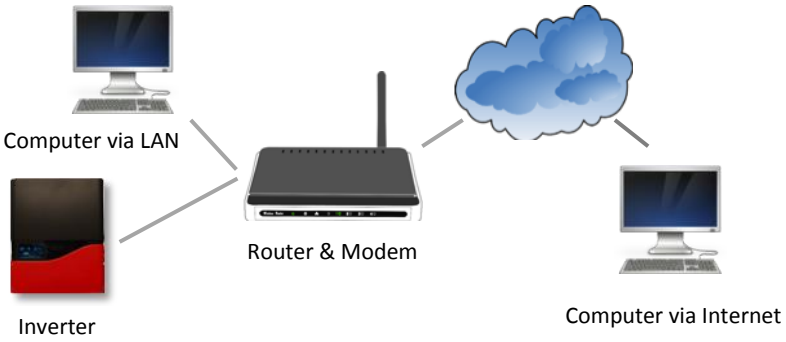

The illustration above demonstrates how to access the inverter via Internet. Similar to LAN, the inverter can be accessed by web browser. However, there is usually a firewall that would block direct access of the LAN from the Internet. In order to overcome this, you will need to set up NAT (Network Address Translation) or Port Forwarding of the router. For detailed information, please refer to the manual provided by your router supplier.

7.6 Browsing Inverter Web Page

Basics

By connecting inverter to a network, you can access the inverter by web browser such as Internet Explorer, Firefox and Safari. Follow the steps below to explore the web page of inverter.

1. Make sure you have successfully connected inverter to a LAN by either Ethernet or Wi-Fi.
2. Tap touch pad to switch to “Operation Frames” to read inverter’s IP address.
3. Open a web browser on your desktop/laptop, key in the IP address you have read previously at the address bar (Refer to figure below. The example IP address here is 192.168.10.122).
4. Daily graphs will load soon after.

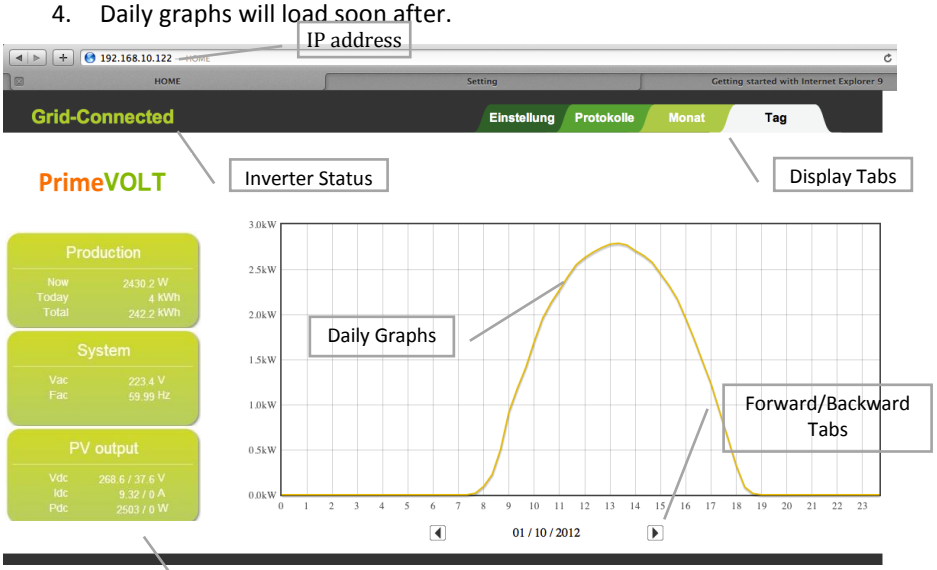

Overview

1. Display Tabs: There are 4 selections available.
    a. Day: Yield graphs of the day
    b. Month: Bar Graphs of a month. When pointing cursor to a specific day, the corresponding yield of that day will highlight automatically. See picture below for illustration

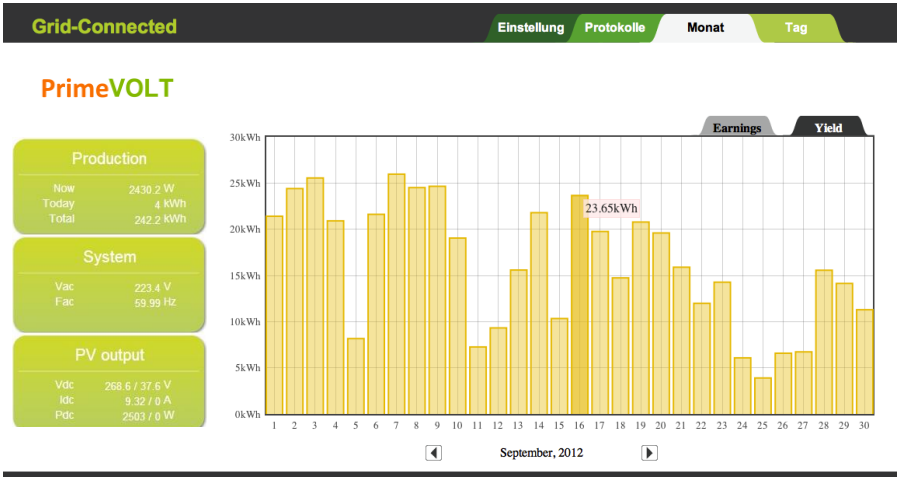

c. Logs: Event records of inverter. Events include activities and errors of inverter. See picture below for demonstration

Uhrzeit	Status	Meldung
2012/10/01 13:01:00	Information	F/W Download
2012/09/30 13:01:00	Information	F/W Download
2012/09/29 13:01:00	Information	F/W Download
2012/09/28 21:35:49	Information	System Started
2012/09/28 13:35:00	Information	AutoUpdate Firmware!
2012/09/28 13:01:00	Information	Check Firmware!
2012/09/27 15:10:17	Information	System reboot.

d. Settings: Information and set-up of inverter

2. Inverter Status: Showing current operation status. During the night and/or when inverter is not working, the area is black. When an error or failure happens, a message will pop up.

3. Information Board: Displays power generation and relevant system parameters. During the night, while inverter is not working, the “system” data will not be viewable.

4. Forward/Backward Tabs: Move current display forward or backward.

■ Settings

When in Settings, you will see the table below.

Inverter Info.	PV-5000W-V	Date & Time	Oct/1/2012 11:02:00
Voltage Range	194.0 ~ 264.0 V	Frequency Range	47.50 ~ 51.50 Hz
Grid Regulation	VDE-AR-N 4105	PF	1.00
70% Limit	No	RCR Info.	(Show)
IP Address	192.168.1.121	Wi-Fi	(Edit)
Auto FW Update	ON	Language	English
Feed-in Rate	$0.32	Administration	Admin

For any item you wish to change, move the cursor and click on it. You will be prompted to enter user name and password before proceeding.

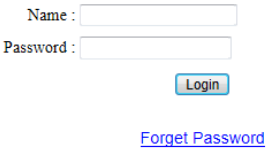

1. Inverter Info. : Name, serial number and F/W version.
2. Time & Date: Clock of inverter. You can set the time zone and synchronize with time server automatically.
3. Voltage Range: Operation voltage range of inverter.
4. Frequency Range: Frequency range of inverter operation.
5. Grid Regulation: The safety regulation the inverter is currently complying with.
6. PF: Power factor. Ranging from -0.8 ~ +0.8.
7. 70% Limit: On or Off. Limits AC output power of inverter to 70% of the original rating.
8. RCR Info: Settings of the **R**ipple **C**ontrol **R**eceiver. Refer to “RCR Setting Information” for details.
9. IP address: The assigned IP address of inverter.
10. Wi-Fi: Settings of Wi-Fi connection, including
    a. Wi-Fi SSID.
    b. WI-FI Password: The key or password of your WLAN.

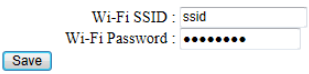

11. Language: Language selection.

12. Feed-in Rate: The feed-in rate. There are graphs displaying your earnings in accordance to the rates you entered.
13. Administration: User name and password. The default name is “admin”; the default password is “admin”.
14. Cloud Monitoring：Go to http://mypowermanager.net to download the user manual of cloud and register your user account to set up your inverters for cloud monitoring.

Some Items May Not Be Changed

Items 3 ~ 8 may not be modified without authorization. Please consult your local authorized service provider.

■ RCR Information

By clicking on “Show” on the right of “RCR Info,” the current settings of RCR will show up like the table next page.

K1	K2	K3	K4	Active	Power
○	○	○	○	○	100%
○	○	○	◉	◉	0%
○	○	◉	○	◉	30%
○	○	◉	◉	○	75%
○	◉	○	○	◉	60%
○	◉	○		○	70%
○	◉	◉	○	○	10%
○	◉	◉	◉	○	50%
◉	○	○	○	◉	100%
◉	○	○	◉	○	20%
◉	○	◉	○	○	100%
◉	○	◉	◉	○	0%
◉	◉	○	○	○	60%
◉	◉	○	◉	○	70%
◉	◉	◉	○	○	20%
◉	◉	◉	◉	○	90%

Signal Length	2 Secs
Fallback Active	Yes
Fallback Time	10 Mins
Fallback Power	100%

1. K1 ~ K4: The relays on RCR.

2. Active: When selected, relays K1 ~ K4 will be active.
3. Power: The corresponding limit on AC output power of inverter.
4. Signal Length: The minimum time required to activate a power limit.
5. Fallback: A fallback is an operation state which the inverter can enter if relays K1~K4 is not active in the table.
6. Fallback Active: When selected, fallback will take place.
7. Fallback Time: The time required if the input status is not valid.
8. Fallback Power: The power limit for fallback.

RCR Cannot Be Set via Web

To set RCR, you need request a setting tool from your inverter supplier. Users cannot do that via Web.

7.7 Using USB

Plugging in USB Stick

To acquire inverter data, you can plug in a pre-formatted USB stick into the USB interface beneath inverter. *The stick must be FAT or FAT32 formatted.*

Remove the cap and plug in a USB stick. If inverter recognizes the device, the USB icon on LCD screen will light up.

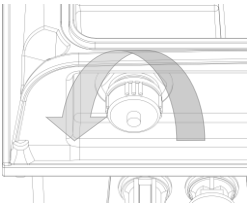

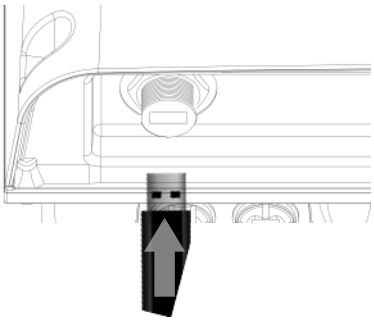

Downloading Inverter Data

After plugging in the USB, all data stored in the inverter will be downloaded to the stick automatically. During the download, USB icon will be blinking.

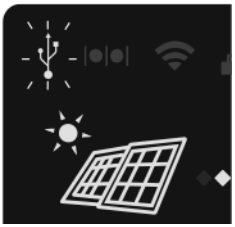

After downloading, while USB icon stays solid, you can then safely unplug the stick. The inverter data has been saved in the USB stick.

Data Format

There will be two data files downloaded. One is for SQLite; the other is a CSV (Common Separation Value).

Note on Firmware Upgrade

If the USB stick contains an update of firmware, the inverter will not download data into USB stick but perform firmware upgrade instead.

- Firmware Upgrade

The inverter can be a U upgraded to the latest firmware version via USB. To do this, you will need to have either the firmware update in USB stick.

- Setting PF and 70% Power Limit

Only Authorized persons can set the PF and 70% power limit. Please contact your local service provider.

- Capacity of Memory

The internal memory of inverter can store up to 3-year length of data. Data older than 3 year will be overwritten automatically.

Back Up Inverter Data Periodically

Once the data in logger has been deleted, it cannot be retrieved. It is highly recommended to back up your inverter data periodically if you wish to retain all recordings.

8. Operation (ES-Series)

■ LCD Display

ES-Series stands for Economic Series. and using a more simple LCD display.
The production using for RS485 monitor the inverter working status, and provide the LED and LCD display, the LCD is 16*2 character type.

The display content include of output power、grid voltage & current、PV module voltage & current、energy of today、totally energy、totally operation time、regulation setting、model name and firmware version.

■ Button icon

Icon	Description	Note
A	LED A，Reference LED fault table A	
B	LED B，Reference LED fault table B	
C	LED C，Reference LED fault table C	
●	Button	

■ LED fault LED indication

LED fault table

LED A	LED B	LED C	Error Message
OFF	OFF	OFF	All Normal
ON	OFF	OFF	DC Current Injection High
OFF	ON	OFF	Relay(s) Failed
OFF	OFF	ON	DC Current Sensor(s) Failed
LED A	LED B	LED C	Error Message
ON	ON	OFF	High Internal Temperature

ON	OFF	ON	GFCI Detection Failed
OFF	ON	ON	Bus Failed
Blink	OFF	OFF	Isolation Fault
OFF	Blink	OFF	Leakage Current High
OFF	OFF	Blink	Cooling Fan(s) Failed

Note：Blinking means LEDs on for 0.5 seconds and off for 0.5 seconds.

LCD window structure

When inverter has connected to electrical grid and started generating power, of the LCM screen enters regular mode. The starting on-screen information by default contains Pac that is the instantaneous solar power being generated at the moment (unit: W), and E-today that is the cumulative solar power that has been generated today (unit: kWh). Push the button on LED panel gently to change inverter information frame on LCM screen. Please refer to flow chart on next page for sequence of on-screen inverter information frames.

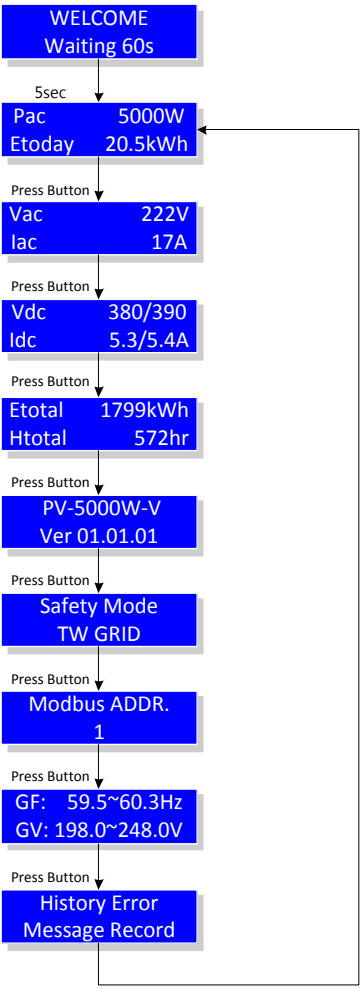

Error message

When inverter encounters an error, LCM screen enter error mode and an error message will be displayed on LCM screen continuously.

This error message will remain on-screen until user presses the button on LED panel to unlock and exit error mode. When exited, the LCM screen returns to regular mode and goes to the information frame displaying the solar power being generated at the moment (unit: W) and cumulative solar power that has been generated today (unit: kWh). The error message mentioned above will be recorded in history error information frame. Refer to the table below for interpretation of all inverter error messages.

System error

Error Message	Indication
AC VOLT HIGH Vac xxx/xxx/xxx V	Grid voltage over range Measured voltage displayed
AC VOLT LOW Vac xxx/xxx/xxx V	Grid voltage below range Measured voltage displayed
AC FREQ HIGH fac xx.x Hz	Grid frequency over range Measured frequency displayed
AC FREQ LOW fac xx.x Hz	Grid frequency below range Measured frequency displayed
PV VOLT HIGH Vdc xxx/xxx V	Solar panel voltage over range Measured voltage displayed
PV ISUL LOW	Check for insulation of solar panels failed
Ground I high Ig xxx mA	Leakage current high Measured current displayed

Inverter internal error (1)

Error Message	Indication
KEEP PV OFF	Internal fault detected Please keep DC breaker of solar panels off
C1	High DC current detected
C2	Relay failed
C3	DC current sensor failed
C4	Internal temperature high
C5	GFCI detection failed
C7	Anti-islanding detection failed
FAN FAILS	Fan not working properly

Inverter internal error (2)

Error Message	Indication
F1	Bus voltage low
F2	Bus voltage high
F3	CPU communication abnormal
F4	Mismatch of firmware version between CPUs
F5	EEPROM memory faulty
F6	Error on system consistency
F7	Over-current in inverter detected
F8	Slow start-up on Bus

History error Information Frame

The inverter error that has occurred most recently is generally recorded by the history error.

History Error Message Record

9. RS485

9.1 About RS485

A typical RS485 connection is as below.

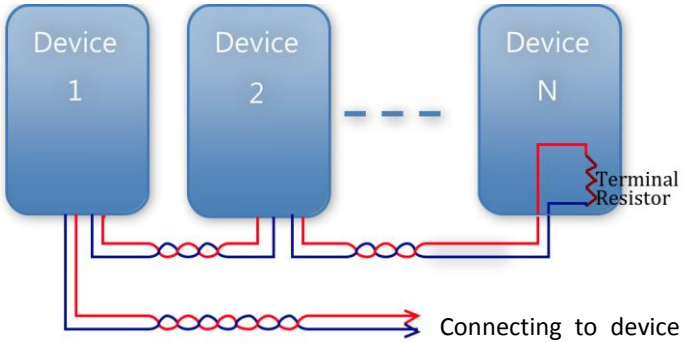

Some Noteworthy Points:

1. Wires between devices and computer shall be twisted.
2. Maximum allowable wire length is 1000 meters.
3. The terminal-end device should have a terminal resistor.
4. Due to multiple connections, each individual device should be assigned an IP address as to send/receive.

9.2 Connecting RS485

- Wiring Diagram

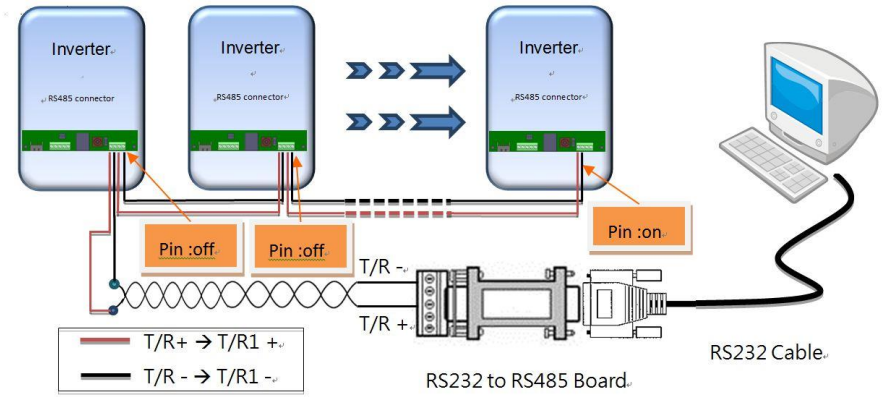

1. Connect T/R+ and T/R- of RS485 converter to the T/R1+ and T/R1- of an inverter respectively.
2. Between two inverters, match T/R2+ and T/R2- of this inverter to T/R1+ and T/R1- of the next inverter.
3. Set terminal resistor switch “ON” of the terminal-end inverter (last inverter of the row) only. The others’ should be set as “OFF.”

■ Inverter hardware interface

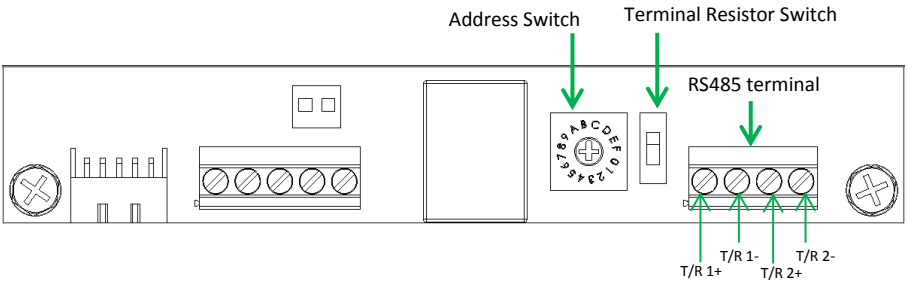

■ Address Setup

To do this setting, use the address rotary switch shown on right. For a single inverter, set the position to “1”; for multiple inverters, please assign them different positions with no duplications. Since only 15 positions (1~F) are available, the maximum number of inverters that can be grouped at a time in a RS485 bus is 15. Position “0” is reserved for broadcast purposes when multiple inverters are employed. Please do not use in all circumstances.

■ Setting the Terminal Resistor

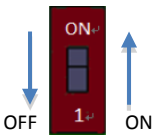

As shown on right, “ON” indicates a resistor is added. ONLY the terminal-end inverter (last inverter of the row) should have this switch set to “ON”. Switches of the other inverters should be set as “OFF.”

Attention!

Incorrect settings could cause communication failure.

10. Connecting to Ripple Control Receiver (RCR)

A RCR receives control signals from your power company. PV series inverters can be connected to RCR directly. Inverters will be able to receive command from RCR and adjust their AC output powers to the corresponding level. A typical RCR installation is illustrated below.

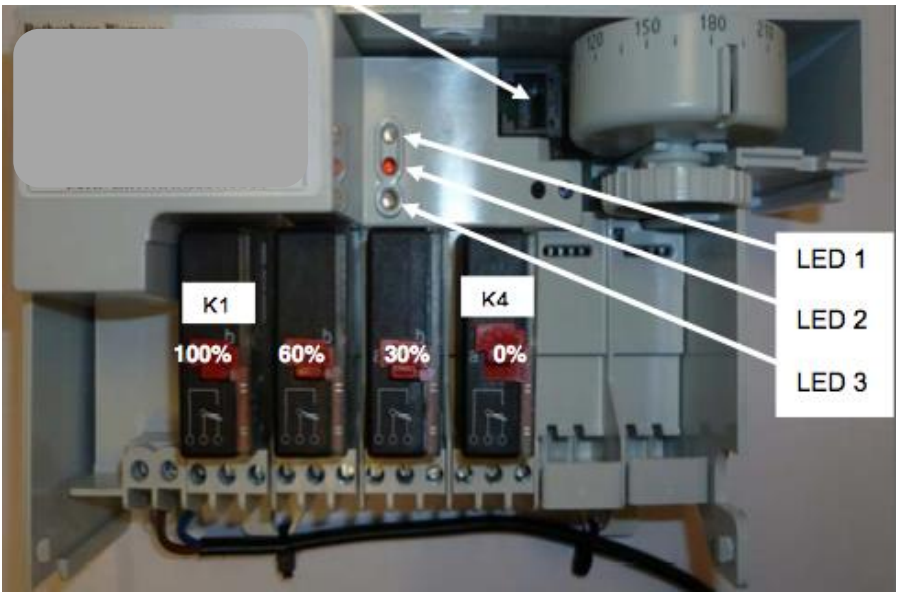

Connections with Single Inverter

When connecting a single inverter only, refer to the figures below.

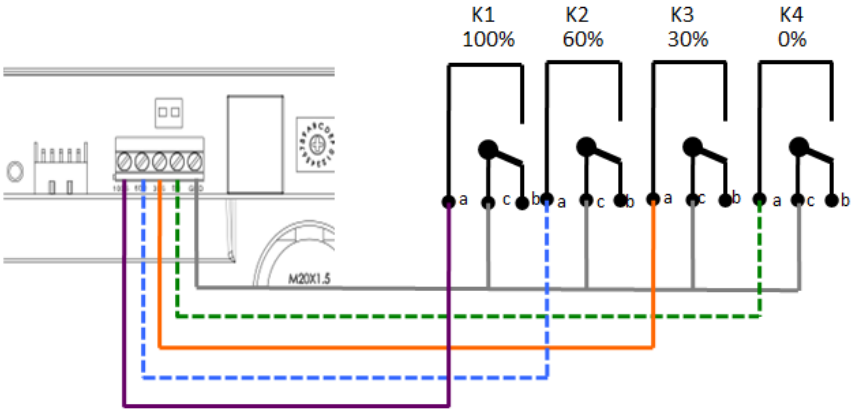

Connections with Multiple Inverters

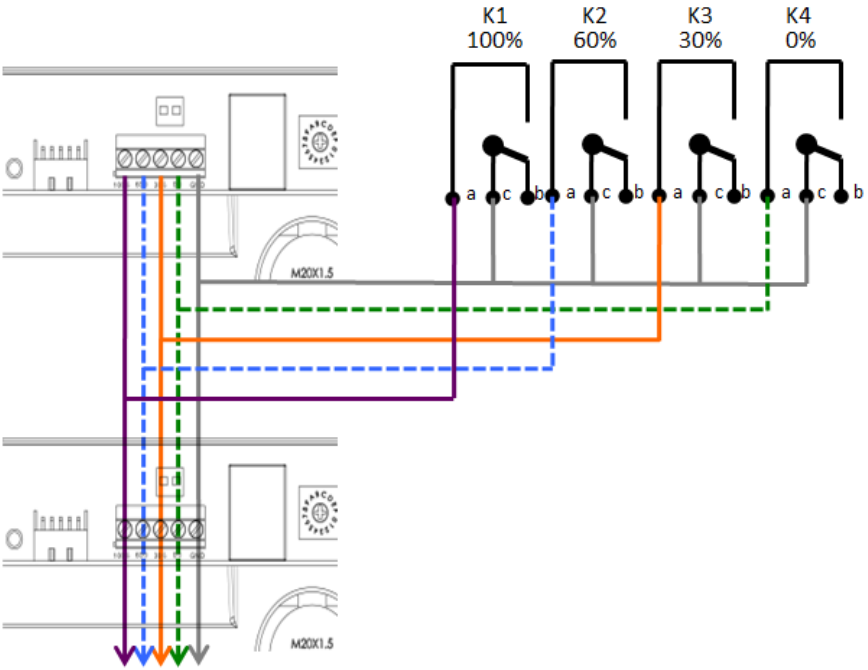

To Other Inverters

11. Maintenance

Conventionally, an inverter does not require any special care throughout its life. However, to keep the inverter in best performance, it's recommended to do the following on a regular basis.

1. Make sure no object is placed on the top of inverter.
2. Dust off the inverter, especially the heat sink located on the top of inverter.
3. Monitor power production figures of inverter.
4. Inspect all wires and cables.

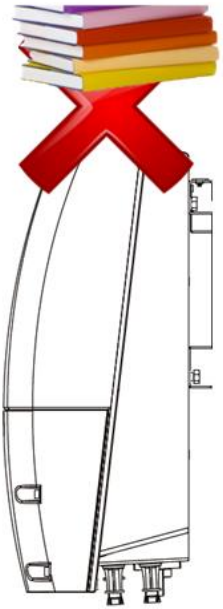

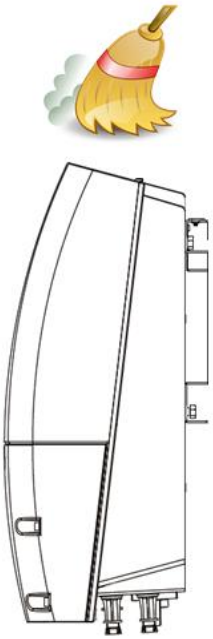

12. Troubleshooting

In cases where an inverter detects a problem, an error message may be conveyed by the system. Use the table below to resolve accordingly. If the problem persists, contact your local service provider for further assistance.

Trouble	Suggestions
1. *No display* 2. *No status LED*	1. Check AC connection such as fuse, breaker and wiring 2. Be sure AC is connected to inverter properly 3. Check AC voltage L1 to N on terminal block are proper (>100Vac) 4. Switch off AC and switch on again
1. *No generation* 2. *Can't read AC and DC message on LCD*	1. Check PV connection and wiring 2. Check PV polarity 3. Check PV voltage (>160Vdc) 4. Wait for stronger sunlight
Error on display	1. Refer to error table in Error Frame section 2. Error other than "C#": Read related meaning and take suitable action 3. "C#" Error: Switch off the AC breaker than the DC. Then switch on the DC and then the AC again 4. If "C#" error continues, please contact with local service to check the "C#" error
Generated power is less than expected	1. Check module installation environment 2. Ensure inverter is not in direct sun light 3. Remove any objects on the inverter 4. Check its ambient temperature
Fan Fails	1. See whether there is any obstacle stocked in the fan 2. If fan still cannot rotate, please call service and replace it by referring the Fan Replacement SOP For brand and model of fan, please contact with local service

13. Specifications

Model	Unit	PV-3000N-V	PV-5000W-V	PV-5000W-HV
Input (DC)				
Recommended Max. Power	W	3300	5500[1]	5500[1]
MPPT Range[2] (full load)	V	315~500	290~500	180 ~ 980
Working Range	V	100~580	100~580	550 ~ 800
Max. DC Voltage	V	580	580	980
Max. DC Current	A	10	10 x 2	10
No. of MPP Trackers		1	2	1
I_{SC} PV	A	15	15 x 2	14
Max. backfeed current to array	mA	1.6	1.6	1.0
Output (AC)				
Nom. Power	W	3000	5000[3]	5000[3]
Max. Power	W	3000	5000[4]	5000[4]
Nominal Voltage	V	220/230/240		
Voltage Range	V	184~264.5[6]		
Nominal Frequency	Hz	50/60		
Power Factor		-0.8 ~ +0.8		
Maximum Current	A	14.3	23.8[5]	23.8[5]
Max. O/P Over-Current Protection	A	20	40	45
Efficiency				
Max. Efficiency	%	97.2	97.2	97.7
Euro- Eta	%	96.4	96.1	97.4
General				
Temp. Range	°C	-20 ~ 55		-25 ~ 60
Temp. Full Power	°C	-20 ~ 45		

[1] 5000W for VDE-AR-N 4105
[2] MPPT range: According to EN50524, it is range under nominal AC power
[3] 4600W for VDE-AR-N 4105
[4] 4600W for VDE-AR-N 4105
[5] 20A for VDE-AR-N 4105
[6] Voltage Range: 184~264.5 for VDE-AR-N 4105

Model	Unit	PV-3000N-V	PV-5000W-V	PV-5000W-HV
Topology		Transformless		
Protection		IP65		
Humidity	%	0 ~ 100		
Cooling		Convection		
Protection Class		I		
Overvoltage Cat.		Pollution Degree III		
Overvoltage Cat.		DC input: II, AC input: III		
Altitude	m	< 2000		
Noise	dB	< 40		
Features				
LCD		Icon Graphic Display (S-Series) 1602 character type (ES-Series)		
RS485		Standard, half-duplex		
Power Reducing		Yes, by USB port with authorized software		
Wi-Fi		Optional		
Date Logging		Yes, 3 year		
Web Server		Yes. Use to monitor power graph, adjust inverter parameters and settings		
Clock Sync		Automatically sync with time server		
Mechanical				
W x H x D	mm	330x375x196	418x485x190	330x383x218
Weight	kg	12	22	15
Input Pairs		1	2	1
DC switch		Built-in		
Compliance				
Grid Monitoring[7]		VDE 0126-1-1/A1, VDE-AR-N 4105, G83/2, G59/3, PEA, MEA, NB/T 32004		
Safety		IEC 62109-1, 62109-2		
EMC Emission		EN 61000-6-3/-4 EN 61000-3-2 EN 61000-3-3 AS/NZS 61000.6.3	EN 61000-6-3 EN 61000-3-11 EN 61000-3-12 AS/NZS 61000.6.3	EN 61000-6-3/-4 EN 61000-3-11 EN 61000-3-12 AS/NZS 61000.6.3/.4
EMC Immunity		EN 61000-6-2		

7 To select the setting, refer to “Change the Grid-Connected and Operation Parameters”

Note: Specifications are subject to change without prior notice.

14. Addendum

Efficiency Charts

PV-3000N-V

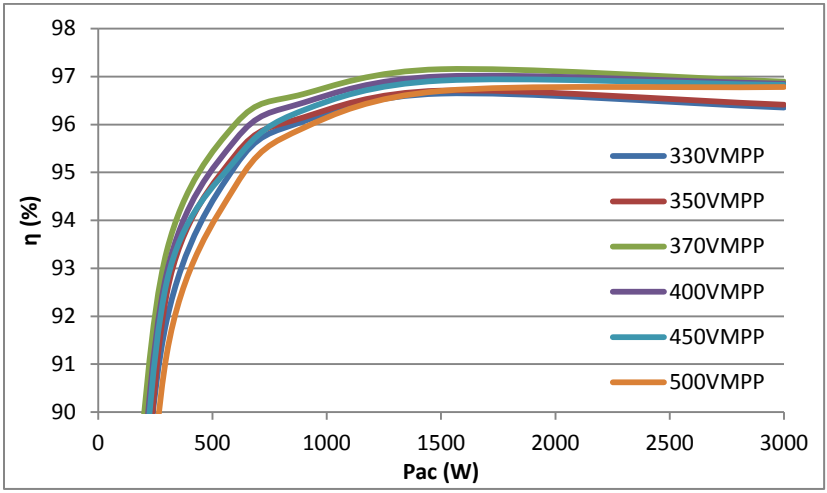

PV-5000W-V

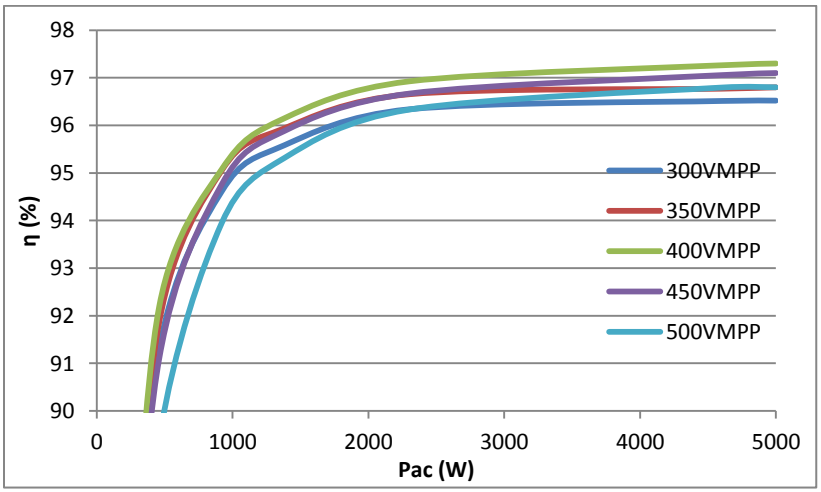

PV-5000W-HV

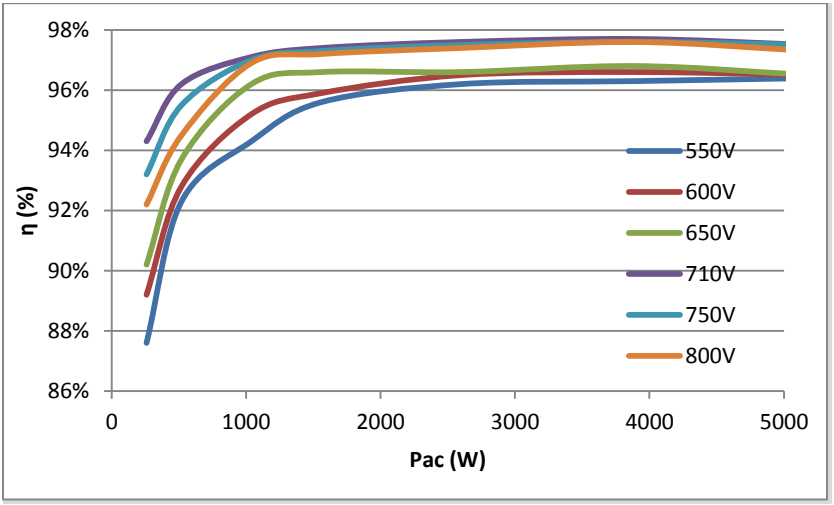
98%
96%
94%
92%
90%
88%
86%
η (%)
0
1000
2000
3000
4000
5000
Pac (W)
550V
600V
650V
710V
750V
800V