POWER LIMITER

G2000

Installation & Operation Manual

Version 0.0 Nov. 2019

Printed on Recycled Paper

Table of Contents

1. Safety Precautions

Before beginning your journey, please read the following safety instructions carefully.

Qualified Personnel ONLY!

Only Qualified technicians shall install or service unit(s) in accordance with local wiring regulations.

PrimeVOLT PV Inverter ONLY!

Designed for PrimeVOLT PV inverter and solar power conversion only; do not use for other PV inverter or conversion purposes.

Recycle

Do not throw this electronic device in a trash dumpster when being disposed of. To minimize pollution of environment, please consult your local service provider.

2. Contact Information

PrimeVOLT Co., Ltd.

TEL: +886-2-2697-5559

FAX: +886-2-2697-3359

ADD: 12F., No.97, Sec.1 Xintai 5th Rd., Xizhi Dist., New Taipei City 22175, Taiwan

Website: http://www.primevolt.com

3. Warranty Terms

Warranty or liability will be void if damage caused by, but not limited to the following:

1. Unauthorized opening of unit
2. Installation faults such as improper environment, wiring and applications
3. Working conditions beyond specified
4. Improper operation of unit
5. Violation of safety instructions in this manual
6. Damage during transportation
7. Any internal modifications
8. Replacing or installation of unauthorized software
9. Unforeseen calamity or force majeure

4. Installation

Product Overview

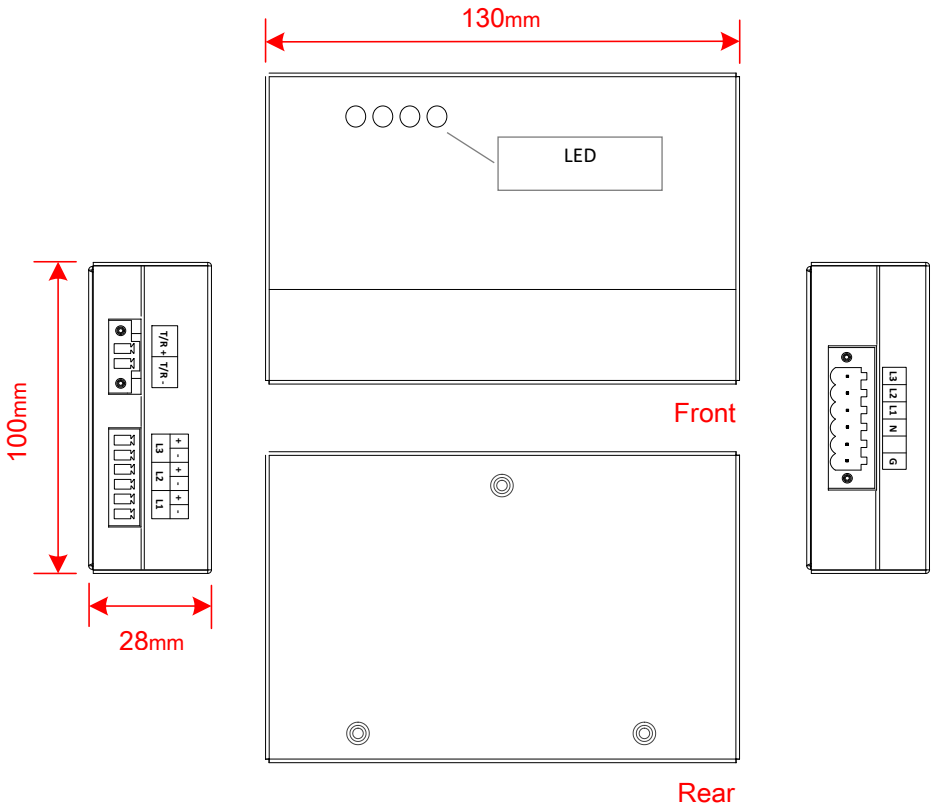

Product Label

Model : G2000			Operating temp. -20~50°C
~	$V_{AC\ nom}$	100~240V	
	$F_{AC\ nom}$	50/60Hz	
	$I_{AC\ max}$	0.5A	Made In Taiwan

■ Unpacking

(1) Power Limiter（G2000）X 1

(2) AC Voltage Connector(6Pin)(big size) X 1

(3) AC Current Connector(6Pin)(small size) X 1

(4) RS485 Connector(2Pin) X 1

(5) User Manual

■ Choosing Proper Installation Site

Suitable for indoor (temperature should not exceed 50˚C, humidity should not exceed 95%)

■ Wire Connections

(1) Connecting "AC Voltage Connector" of the unpacking accessories to the "AC Voltage Terminal"

(2) Connecting "AC Current Connector" of the unpacking accessories to the "AC Current Terminal"

(3) Connecting " RS485 Connector" of the unpacking accessories to the " RS485 Terminal"

(4) One limiter can connect up to 20 inverters through RS485 interface

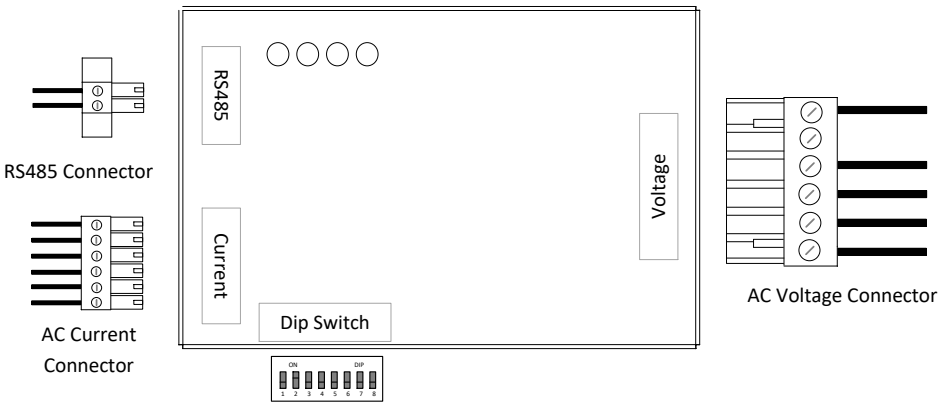

When the AC power is on, the LED will appear in solid green and it appears in flashing green when RS485 communication is in normal condition. .

■ Overview of Connection

(1) AC Voltage Terminal

(2) RS485 Terminal

(3) AC Current Terminal

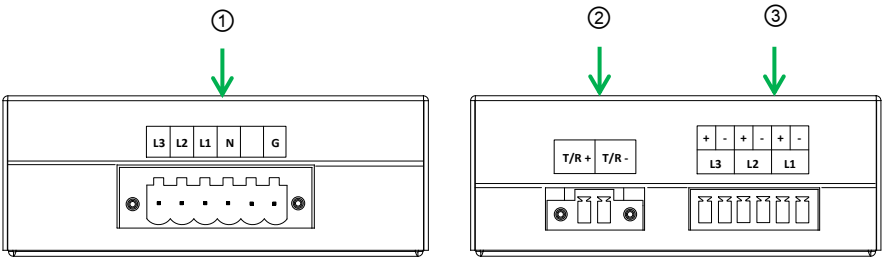

■ AC Wiring Connection (Voltage Input)

1. For single-phase wiring input, the AC voltage terminals need to be connected to L1-N.
2. For three-phase wiring input, the AC voltage terminals need to be connected to L1/L2/L3/N.

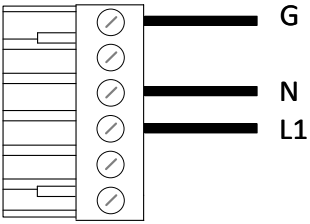

Single phase

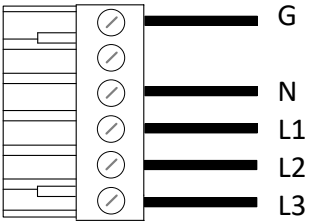

Three phase

■ AC Wiring Connection(Current Input)

1. For single-phase wiring input, the AC current terminals need to be connected to L1 k/l.
2. For three-phase wiring input, the AC current terminals need to be connected to L1 k/l , L2 k/l and L3 k/l.

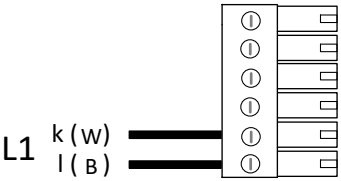

Single phase

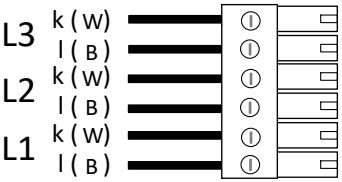

Three phase

NOTE：1. Refer to the CT specification for the CT wiring k/l

2. (W) means white color wire, (B) means black color wire

■ CT Configuration

To ensure the CT ring buckle is in the correct direction before connection, please refer to following application diagram. Choose one of the application and set through the power limiter's dip switch DIP7.

(1) Connecting CT buckle toward to grid side ①

(2) Connecting CT buckle toward to load side ②

Please follow the below configuration and make sure the direction of the CT buckle is mainly in the direction of K->L.

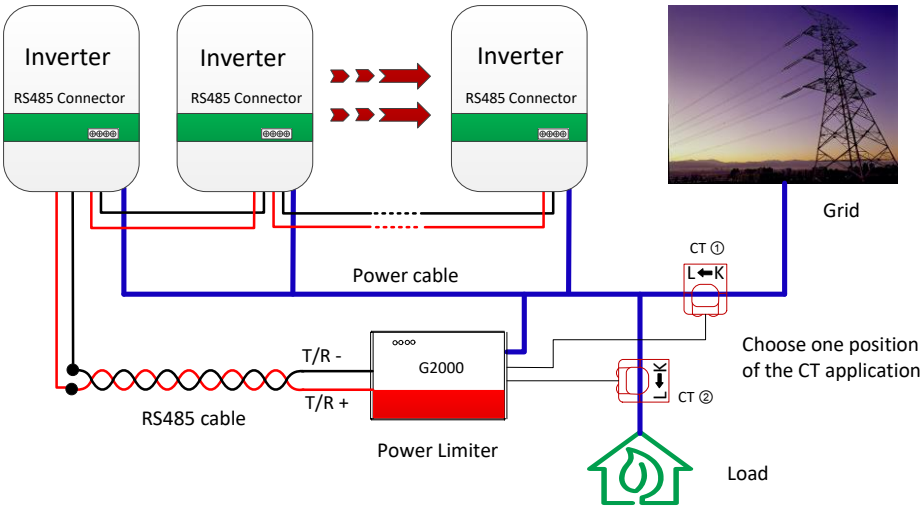

Attention

In the three phases application, power limiter is ONLY applied to 3Ø4W power system, isn't applied to 3Ø3W power system.

5. LED Indication

The LED on the power limiter left side will show the power limiter operation status by different colors. In normal operation, the LED appears in green color. It appears in red color when the current flow is from the load side to the grid side.

LED light sequence from left to right side definition is as follow :

Color	Indication
🟢	Power on and inverter RS485 connection
🔴	L1 current flow
🔴	L2 current flow
🔴	L3 current flow

LED light status definition is as follow :

Status	Indication
○	Power limiter is disconnected to AC.
🟢	Solid Green: Power limiter is power ON.
✸	Flashing Green: RS485 connection with inverter is in normal
🔴	Solid Red: Current flow to grid

6. Setting

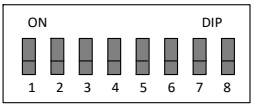

The relevant setting parameters and functions can be set through the dip switch of power limiter which are including the firmware CT ratio, CT position and communication mode.

■ Firmware CT ratio

Item	DIP4	DIP5	DIP6	CT Ratio	Max. Current (R.M.S)(A)
1	OFF	OFF	OFF	1000:1	50
2	ON	OFF	OFF	2000:1	100
3	OFF	ON	OFF	2500:1	125
4	ON	ON	OFF	3000:1	150
5	OFF	OFF	ON	4000:1	200
6	ON	OFF	ON	5000:1	250
7	OFF	ON	ON	6000:1	300
8	ON	ON	ON	10000:1	500

To adjust the switch ON or OFF for dip switch pin 4~6, it depends on the CT specification and please refer above table to adjust the ON or OFF selection of each pin of 4~6.

NOTE：Please pay attention that the power limiter will fail to achieve the power limitation to the gridif the dip 4~6 setting are presenting incorrect ON / OFF.

■ CT position

Item	DIP7	Limiter Mode
1	OFF	CT on the grid side
2	ON	CT on the load side

If dip switch DIP7 is OFF, it indicates that the CT position is on the grid side.
If dip switch DIP7 is ON, it indicates that the CT position is on the load side.

Communication Mode

Item	DIP8	Communication Mode
1	OFF	Host
2	ON	Device

If dip switch DIP8 is OFF, it indicates that the power limiter is in Host communication mode.

If dip switch DIP8 is ON, it indicates that the power limiter is in Device communication mode.

7. RS485 Communication Interface

■ About RS485

A typical RS485 connection is as below.

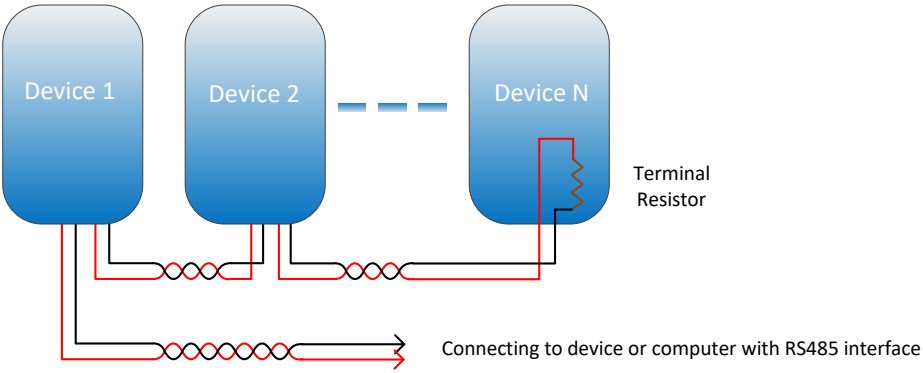

Some Noteworthy Points:

1. Wires between devices and computer shall be twisted.
2. Maximum allowable wire length is 1000 meters.
3. The terminal-end device should have a terminal resistor.
4. Due to multiple connections, each individual device should be assigned an IP address as to send/receive.

■ RS485 Hardware Interface

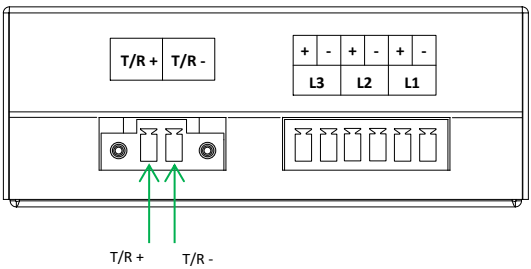

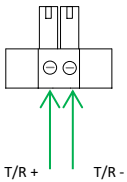

RS485 wiring illustration

Wiring Diagram

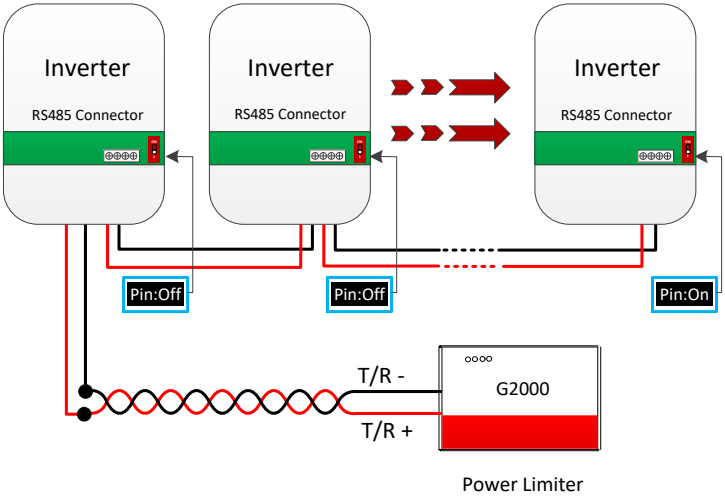

1. Connecting T/R1+ and T/R1- of inverter RS485 connector to the T/R+ and T/R- of the data logger respectively.
2. Between two inverters, connecting T/R2+ of first inverter with T/R1+ of next inverter, and connect T/R2- of first inverter with T/R1- of next inverter.
3. Set terminal resistor switch "ON" of the terminal-end inverter (the last inverter of the row) only. The others should be set as "OFF".

Setting the Terminal Resistor

Each inverter has built-in terminal resistor, if RS485 is connecting to multiple inverters or the total communication length is too long to cause the abnormal communication, please set the terminal resistor switch to "ON" of the last inverter in the row connection, all other remaining inverters shall switch to "OFF".

ON Terminal Resistor is active

1 (OFF) Terminal Resistor is invalid

Attention!

Improper setting of the terminal resistor will cause communication failure.

Use Standard RS485 Wire

In order to achieve good communication, be sure to use standard copper mesh shielding of RS485 twisted. Do not use general network cable as RS485 wire.

RS485 Cable AC and DC Cable Separately

To maintain good communication and reduce interference, please separate the RS485 cables from the AC and DC wiring and keep at least 10cm far away or use a cable with metal shield isolation.

8. Troubleshooting

Please pay attention to the following matters by regularly visual check to ensure the power limiter is operating normally.

1. Clean the dust on the power limiter.
2. Check the operation and status of the power limiter.
3. Check all wiring to confirm there is no corrosion or breakage.
4. Check all the terminals and make sure they are not loose.

Referring to below table to resolve accordingly. If the problem persists, please contact your local service partners for further assistance.

Abnormal	Solution
LED no display	1. Check if the AC power is connected to the L1-N position. 2. Switch off the AC power and switch on again.
LED in solid red color	1. Check if the direction of the CT buckle is on the correct position. 2. Check if the CT +/- wiring is correct. 3. Check if the wiring of L1 / L2 / L3 voltage and current are corresponding. 4. Check if the RS485 communication is operating in normal (check if the green LED is flashing).
RS485 disconnection	1. Check the wiring and connector. 2. Check if the IP address of inverter is configured correctly, and shall not duplicate the same IP address of the other inverter. 3. Check if the last inverter in the row connection is set terminal resistor switch “ON” , and all the remaining inverters shall switch “OFF”. If there is only one inverter, do not switch on the terminal resistor. 4. Check if the cable is well twisted. 5. Keep the RS485 cable at least 10cm far away from the AC and DC wires or use the cable with metal shield isolation.

9. Specifications

Item	Unit	Specification
Input (AC)		
Nominal Voltage	V	220/230/240(1Ø), 220/380;230/400;240/415(3Ø)
Nominal Frequency	Hz	50/60
Power consumption	W	2.5
General		
Operating Temperature	°C	-20 ~ 50
Ingress Protection		IP20
Protection		Class II
Humidity	%	0 ~ 95
Detection signal		
Voltage Signal		1Ø (2 wire) ; 3Ø (4 wire)
Current Signal		1Ø (1); 3Ø (3)
Supporting CT Type		8 types (Refer to Firmware CT ratio)
CT Detection Position		Grid side / Load side
Communication Interface & Display		
LED		Green/Red
RS485		Standard, Half-Duplex
Number of inverters		20
Mechanical		
Dimension (W x H x D)	mm	130 x 100 x 28
Weight	kg	0.32
Certification		
Safety		CE

Note: Specifications are subject to change without prior notice.

Note: Power limiter contains shunt resistor. Please don't parallel resistor or use CT type with built-in resistor.

P/N: 614-37138-00