THREE PHASES ON-GRID PV INVERTER

PV-10000T-U/PV-15000T-U/PV-20000T-U/PV-30000T-U/PV-40000T-U

Installation & Operation Manual

Ver. 3.0 (EN) May 2020

Printed on Recycled Paper

Table of Contents

1. Safety Precautions 2
2. Contact Information 2
3. Warranty Information 3
4. PV System 4
5. Product Overview 5
6. Installation 10
6.1 Assembly Chart 14
6.2 Choosing Proper Installation Site 15
6.3 Mounting Properly 16
6.4 Mounting Procedure 17
6.5 Wire Connections 21
6.6 Ready to Start 33
7. Operation 35
7.1 Overview 35
7.2 Network and Internet (RJ45) 43
7.3 RS485 44
7.3.1 About RS485 44
7.3.2 Connecting RS485 44
7.4 Browsing Inverter Web Page 46
7.5 Using USB 50
8. Connecting to Ripple Control Receiver (RCR) 52
9. Maintenance 55
10. Troubleshooting 56
11. Specifications 60
12. Addendum 65

1. Safety Precautions

Before beginning your journey, please read the following safety instructions carefully.

Qualified Personnel ONLY!

Only Qualified technicians may install or service the inverter in accordance with local wiring regulations.

PV Modules ONLY!

Designed for PV modules conversion only, do not connect to other DC power sources. Please note even the inverter is not working, voltage will be generated when the panel is exposed to sunlight.

Hot Surface

The surface temperature of inverter may be relatively high during operation, please avoid touching it in case of necessary operations.

Recycle

Do not throw this electronic device in a trash dumpster when being disposed of. To minimize pollution of environment, please consult your local service provider.

30 minutes

Danger!

Before performing wiring, repair, cleaning or other work, technicians should disconnect the AC and DC power to reduce the risk of electric shock. Please note that the capacitor in the inverter may still be charged to cause danger of electric shock within 30 minutes after the power is disconnected.

2. Contact Information

PrimeVOLT Co., Ltd.

TEL: +886-2-2697-5559

FAX: +886-2-2697-3359

ADD: 12F., No.97, Sec.1 Xintai 5th Rd., Xizhi Dist., New Taipei City 22175, Taiwan

Official Website: http://www.primevolt.com

3. Warranty Information

Warranty or liability will be void if damage caused by, but not limited to the following:

1. Unauthorized opening of unit
2. Installation faults such as improper environment, wiring and applications
3. Working conditions beyond specified
4. Improper operation of unit
5. Violation of safety instructions in this manual
6. Damage during transportation
7. Any internal modifications
8. Replacing or installation of unauthorized software
9. Unforeseen calamity or force majeure

4. PV System

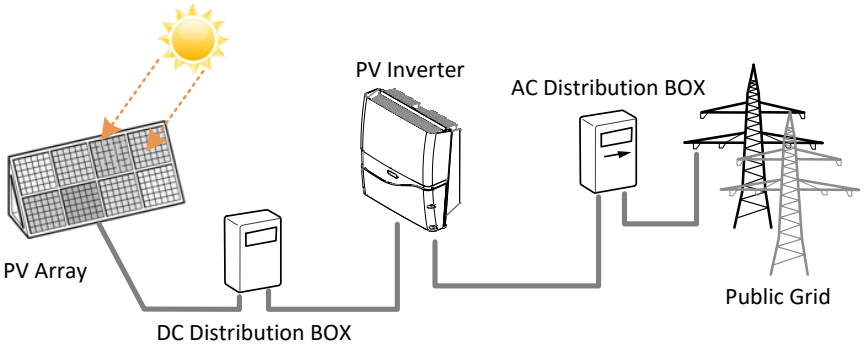

A typical PV system contains:

1. PV Array: Receives sunlight and generates DC power
2. DC Distribution box: Links between PV Array and PV inverter, include of DC switch and surge protection device
3. Inverter's DC Switch: PV Inverter has built-in DC Switch
4. PV Inverter: Converts DC power of the PV Array to AC power for public grid
5. AC Distribution Box: Links between PV inverter and public grid include of No-Fuse breaker or Earth Leakage Circuit Breaker
6. Public Grid: Provides utility for homes

5. Product Overview

PV-10000T-U

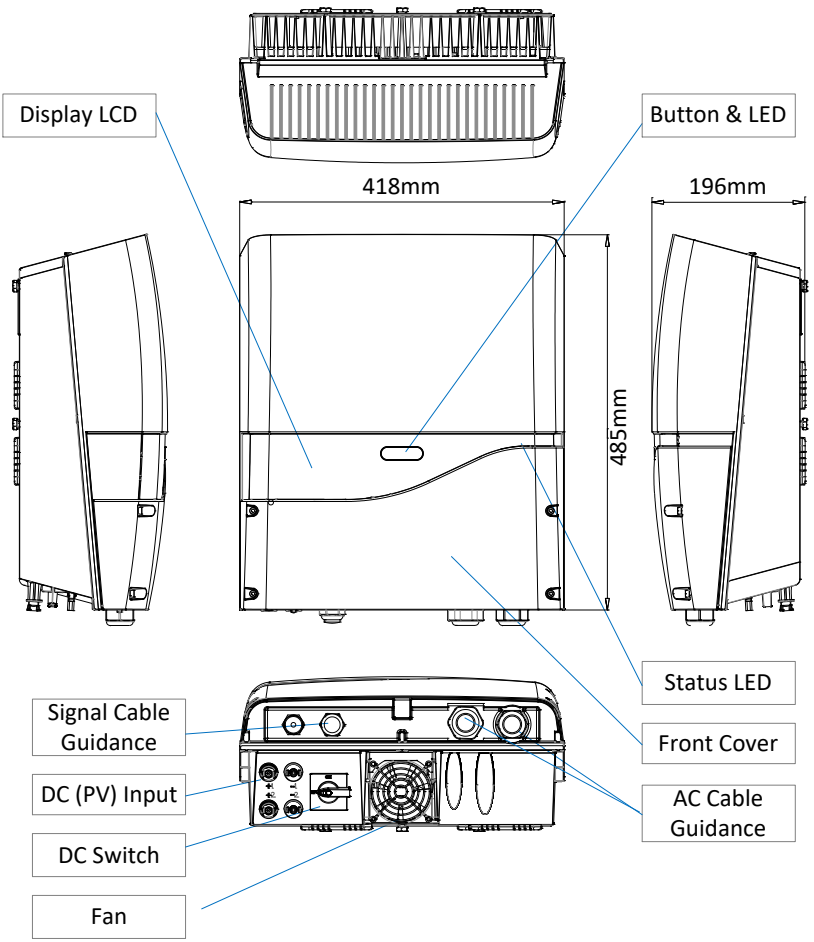

PV-15000T-U

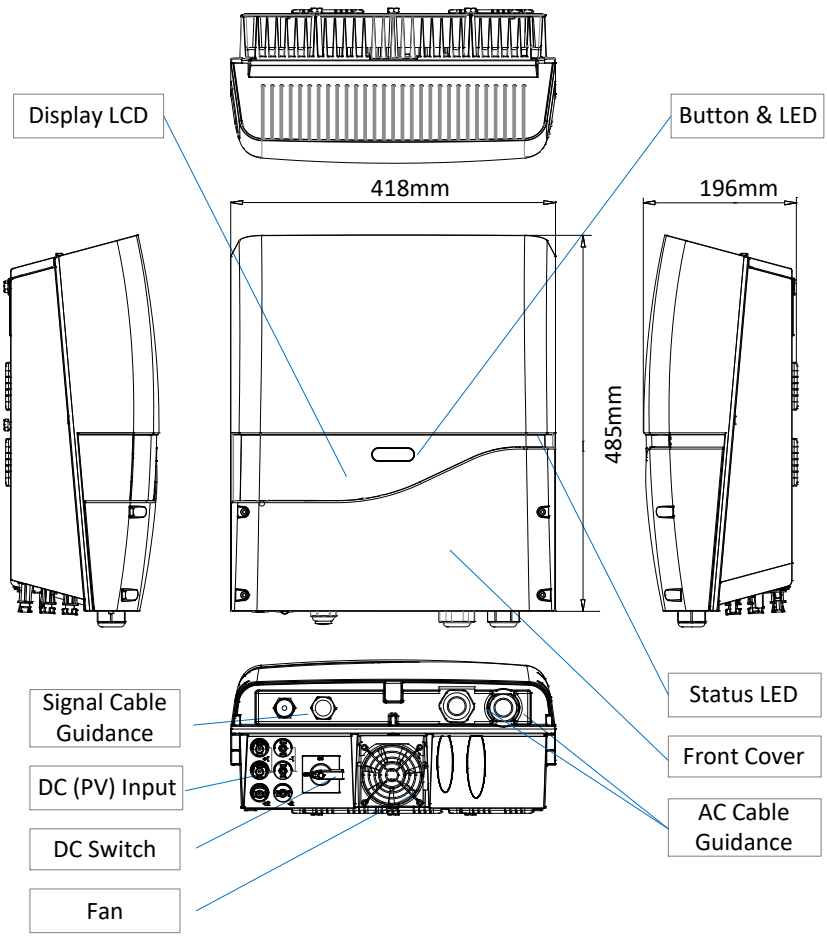
Display LCD
Button & LED
418mm
196mm
485mm
Signal Cable Guidance
DC (PV) Input
DC Switch
Fan
Status LED
Front Cover
AC Cable Guidance

PV-20000T-U

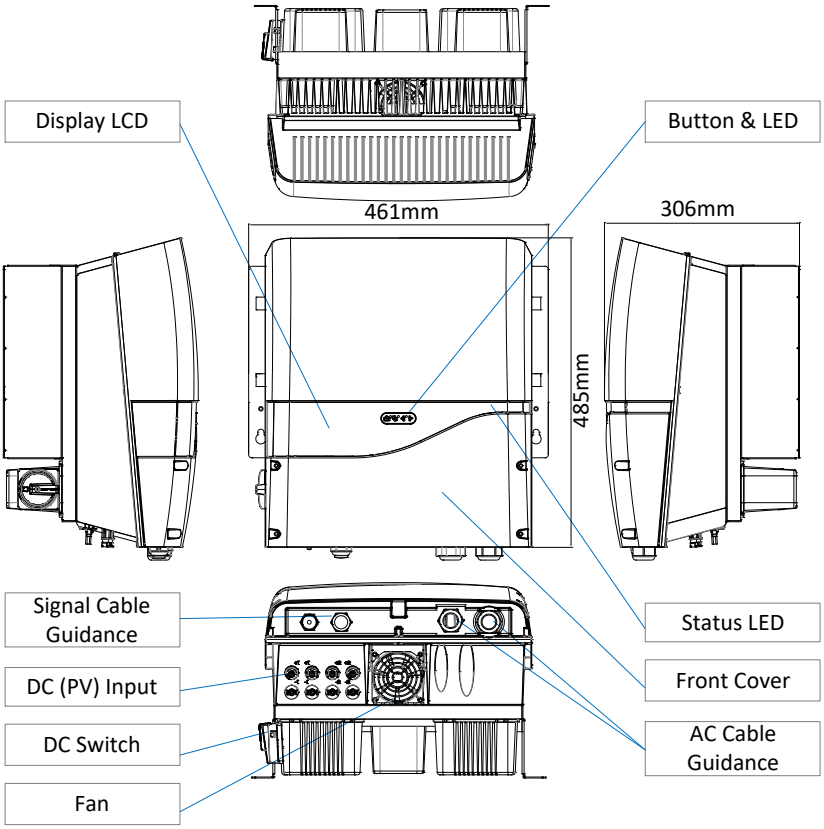
Display LCD
Button & LED
461mm
306mm
485mm
Signal Cable Guidance
DC (PV) Input
DC Switch
Fan
Status LED
Front Cover
AC Cable Guidance

PV-30000T-U/PV-40000T-U

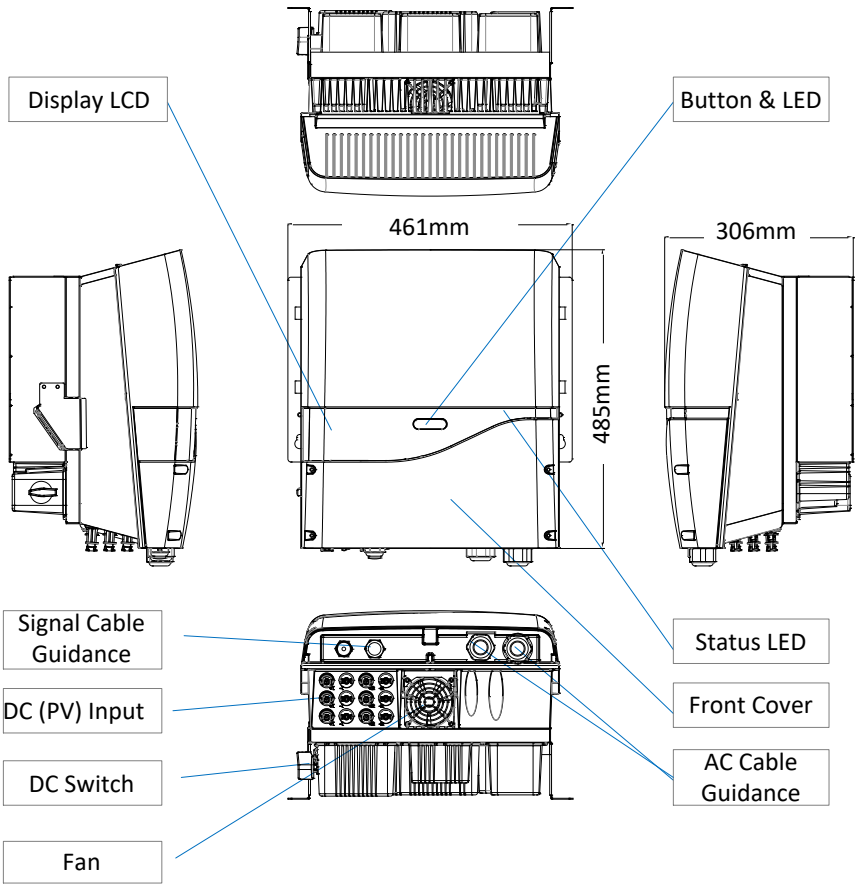

Product Labels

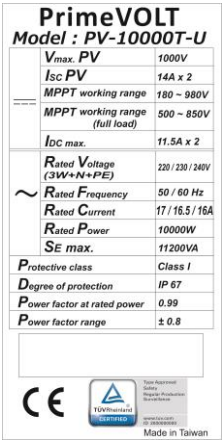

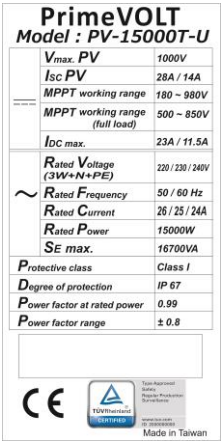

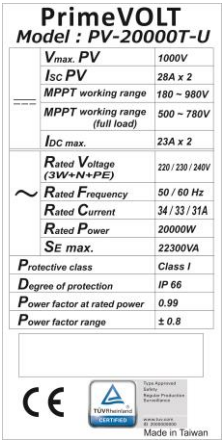

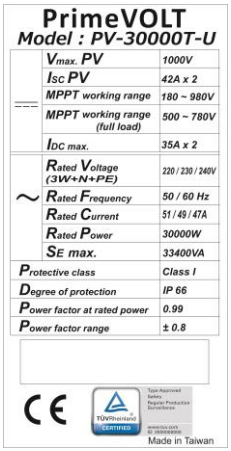

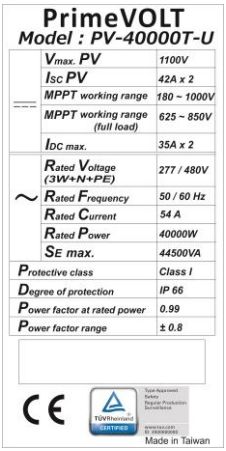

6. Installation

PV-10000T-U

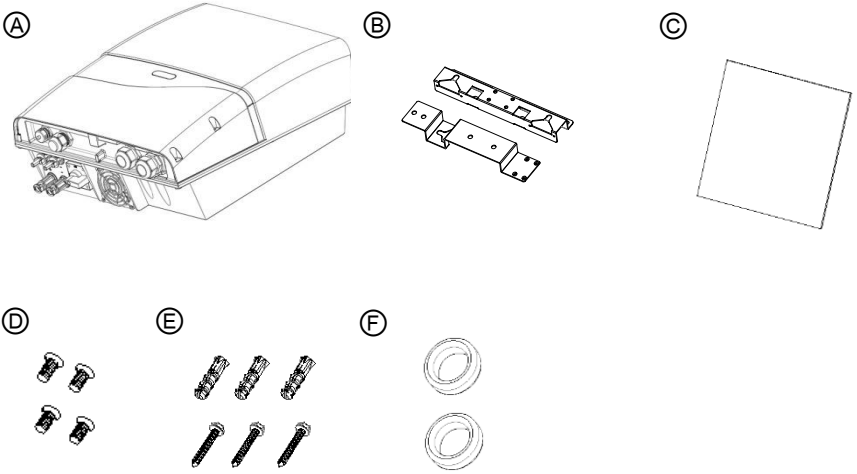

Item	Description
Ⓐ	Inverter
Ⓑ	Mounting bracket kit
Ⓒ	User manual
Ⓓ	M4 flat screws (8mm) × 4, used for mounting bracket
Ⓔ	Plastic anchors & screws (Φ6.5*32mm) × 3, used to install mounting bracket on wall
Ⓕ	Gray EMI core × 1 for Ethernet cable (RJ45) Gray EMI core × 1 for signal cable (RS485/RCR)

PV-15000T-U

Ⓐ

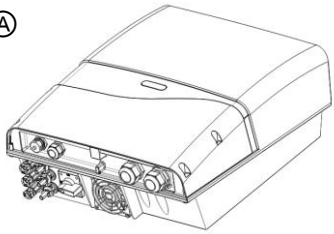

Ⓑ

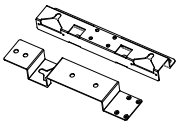

Ⓒ

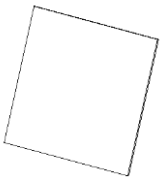

Ⓓ

Ⓔ

Ⓕ

Ⓖ

Item	Description
Ⓐ	Inverter
Ⓑ	Mounting bracket kit
Ⓒ	User manual
Ⓓ	M4 flat screws (8mm) × 4, used for mounting bracket
Ⓔ	Plastic anchors & screws (Φ6.5*32mm) × 3, used to install mounting bracket on wall
Ⓕ	Brown EMI core × 1 for Ethernet cable (RJ45) Gray EMI core × 1 for signal cable (RS485/RCR)
Ⓖ	Insulated ring terminal (6 mm^2) × 1 M4 screw × 1 (10mm) EMI core × 1 for grounding

PV-20000T-U

Ⓐ

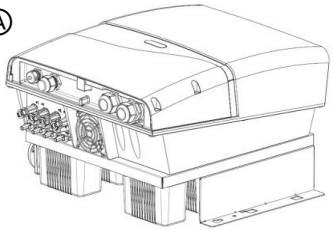

Ⓑ

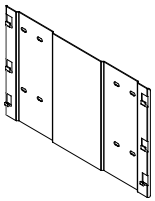

Ⓒ

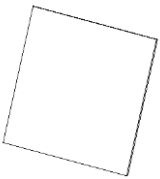

Ⓓ

Ⓔ

Ⓕ

Item	Description
Ⓐ	Inverter
Ⓑ	Mounting bracket kit
Ⓒ	User manual
Ⓓ	Plastic anchors & screws (Φ6.5*32mm) × 4, used to install mounting bracket on wall
Ⓔ	Gray EMI core × 1 for Ethernet cable (RJ45) Gray EMI core × 1 for signal cable (RS485/RCR)
Ⓕ	Insulated ring terminal (6 mm^2) × 1 M4 screw (10mm) × 1

PV-30000T-U/PV-40000T-U

Ⓐ

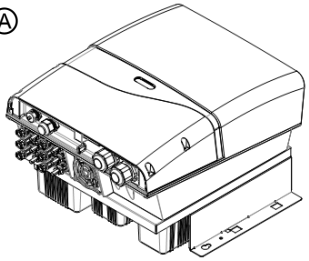

Ⓑ

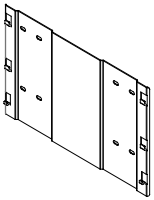

Ⓒ

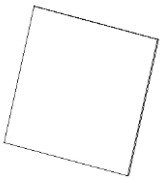

Ⓓ

Ⓔ

Item	Description
Ⓐ	Inverter
Ⓑ	Mounting bracket kit
Ⓒ	User manual
Ⓓ	Plastic anchors & screws (Φ6.5*32mm) × 4, used to install mounting bracket on wall
Ⓔ	Gray EMI core × 1 for Ethernet cable (RJ45) Gray EMI core × 1 for signal cable (RS485/RCR)

6.1 Assembly Chart

PV-10000T-U/PV-15000T-U

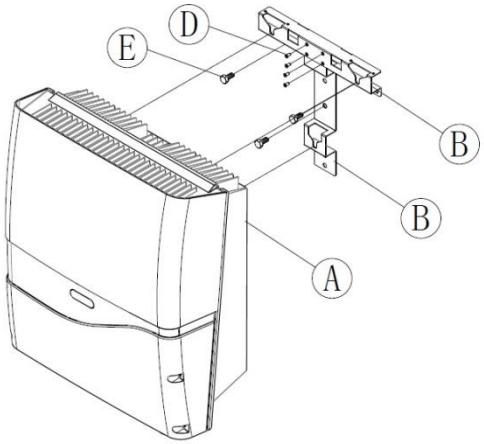

PV-20000T-U/PV-30000T-U/PV-40000T-U

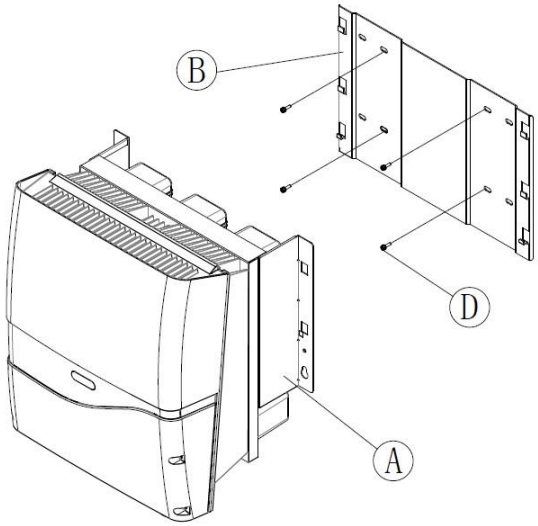

6.2 Choosing Proper Installation Site

Avoid exposing the inverter in direct sunlight or to rain and select the proper mounting surface.

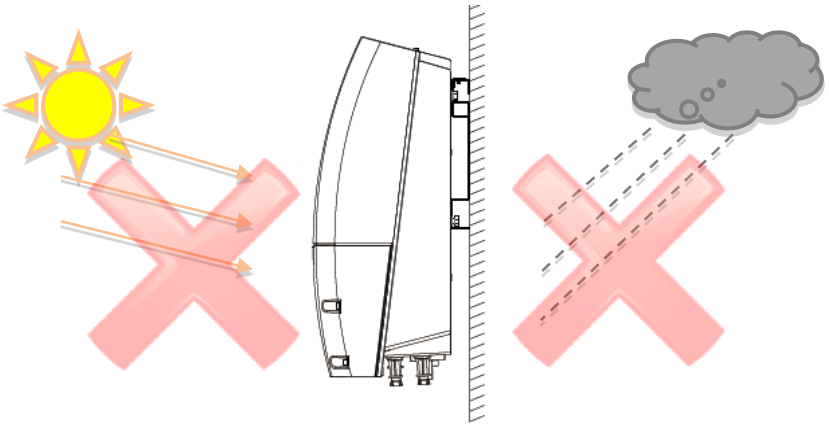

Direct Sunlight

Direct Rain

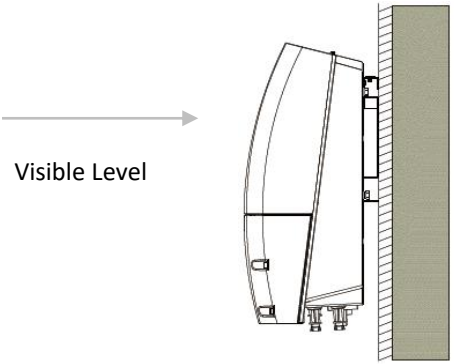

Mounting Surface	OK or NO
Concrete	OK
Metal	OK
Stone	OK
Plastics/Acrylic	No
Wood	No

6.3 Mounting Properly

- Orientation

Mount the inverter in vertical direction; tilt or horizontal mounting should be avoided.

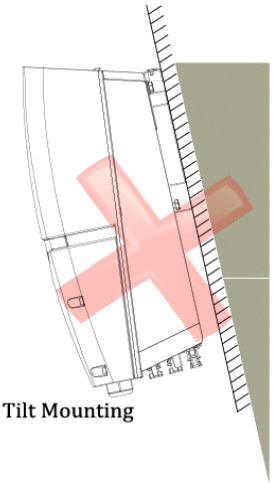

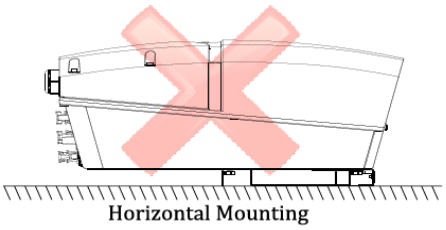

- Keeping Clearance

To retain the good cooling condition, keep each of unit over 20cm left and right, 30cm upper and down and ensure no any object is put around the units to affect the cooling.

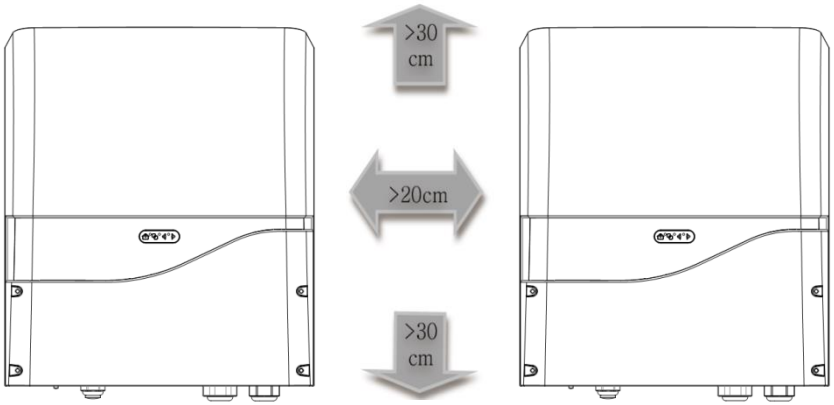

6.4 Mounting Procedure

PV-10000T-U/PV-15000T-U

■ Dimensions of Bracket

The bracket is used to support inverter on wall. Refer to the recommendations bracket size and holes position below to complete mounting.

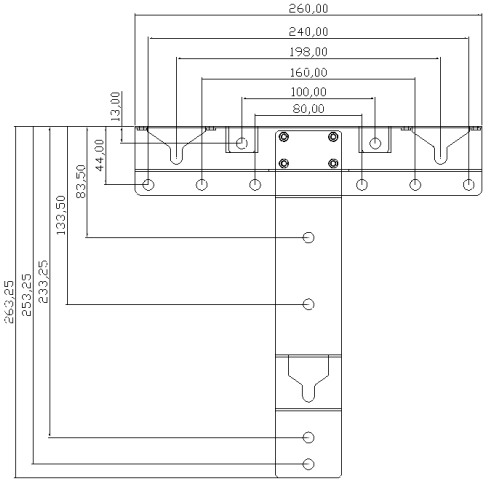

■ Assembling Bracket

Before fixing on wall, assemble the bracket as below. (use M4 flat Screws x 4) item of Ⓓ accessory kit.

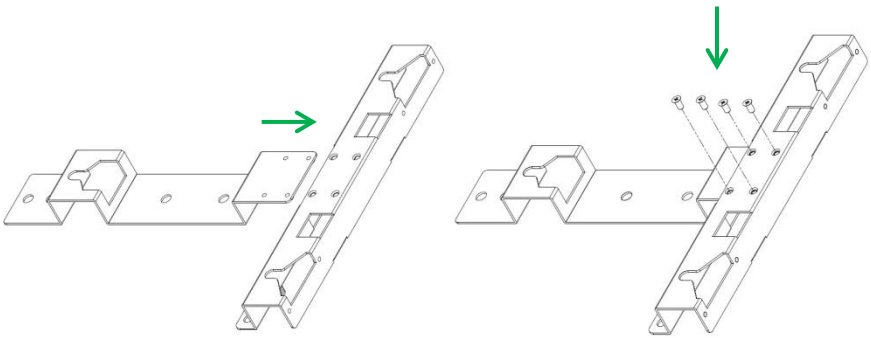

Mounting Bracket

1. Place the assembled bracket on where the inverter will be installed. Make proper drill holes and mount the assembled bracket with screws from accessory kit.
2. Use item Ⓔ (torque: 1.0-1.2Nm) to install mounting bracket on wall.
3. For safe and firm mounting, make at least 3 drill holes in a triangular manner as demonstrated on right.

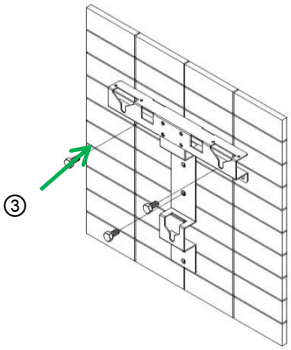

Attaching Inverter

1. Lift inverter slightly higher than bracket, and make sure all fixing points on back are at correct positions.
2. Attach inverter on bracket.
3. Hang inverter on bracket slowly. Confirm that the three studs behind the inverter are stuck in the three fixing points on the bracket

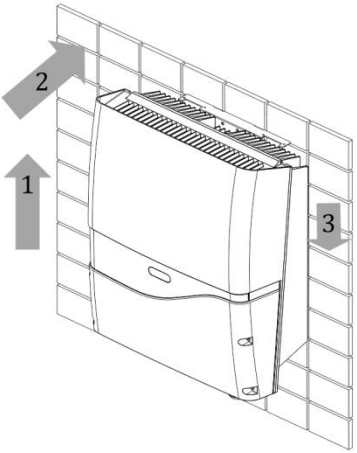

Checking

1. All supporting points are firm.
2. Inverter is well installed and secured on wall.

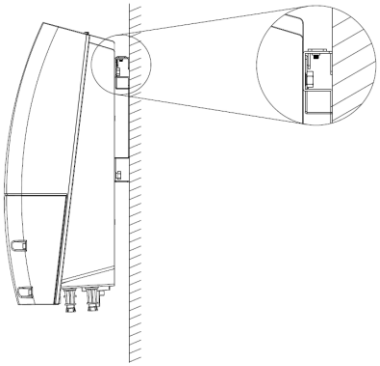

PV-20000T-U/PV-30000T-U/PV-40000T-U

■ Dimensions of Bracket

The bracket is used to support inverter on wall. Refer to the recommendations bracket size and holes position below to complete mounting.

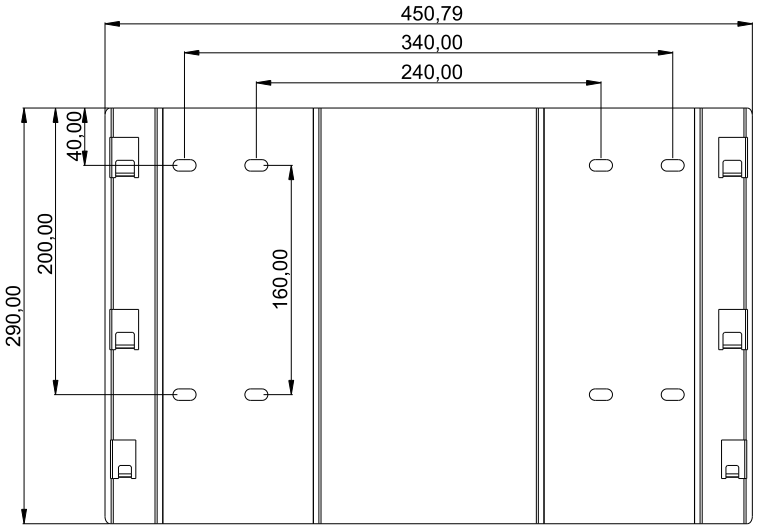

■ Mounting Bracket

1. Place the assembled bracket on where the inverter will be installed and make proper drill holes.
2. Use item Ⓓ (torque: 1.0-1.2Nm) to install mounting bracket on wall.
3. For safe and firm mounting, make 4 drill holes as demonstrated on right and screw them properly and tightly.

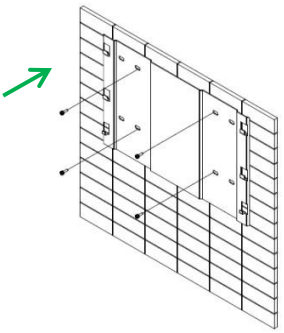

Attaching Inverter

1. Lift inverter slightly higher than bracket and make sure all fixing points on back are at correct positions.
2. Attach inverter on bracket.
3. Hang inverter on bracket slowly.

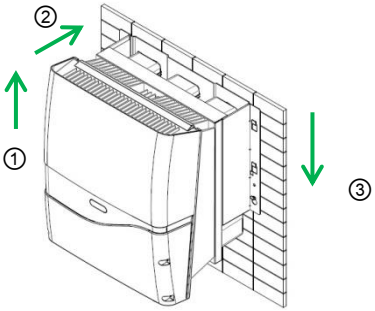

Checking

1. All supporting points are firm.
2. Inverter is well installed and secured on wall.

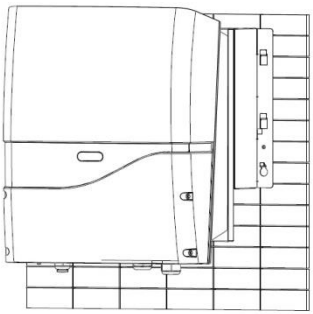

6.5 Wire Connections

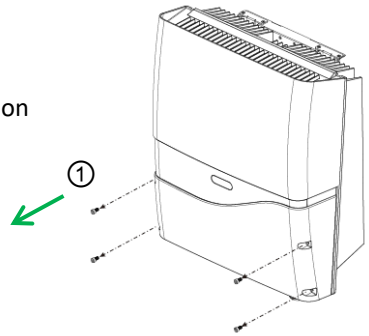

- Opening Front Cover
  1. Remove the 4 screws on cover as shown on right.
  2. Take off the cover gently.

- Overview of Wiring Area

1. Cable Gland 1 M32 (AC cables)
2. Cable Gland 2 M32 (AC cables)
3. AC terminal block
4. AC terminal block (PE or GND is located separately on PV-15000T-U/PV-20000T-U)
5. Internal cooling fan
6. RS485 terminal
7. RS485 terminal resistor switch
8. RS485 address selector
9. RJ45 port for Internet access
10. Ripple Control receiver (RCR) terminal
11. USB socket
12. Cable Gland M25 (RJ45/RS485/RCR cables)

PV-10000T-U

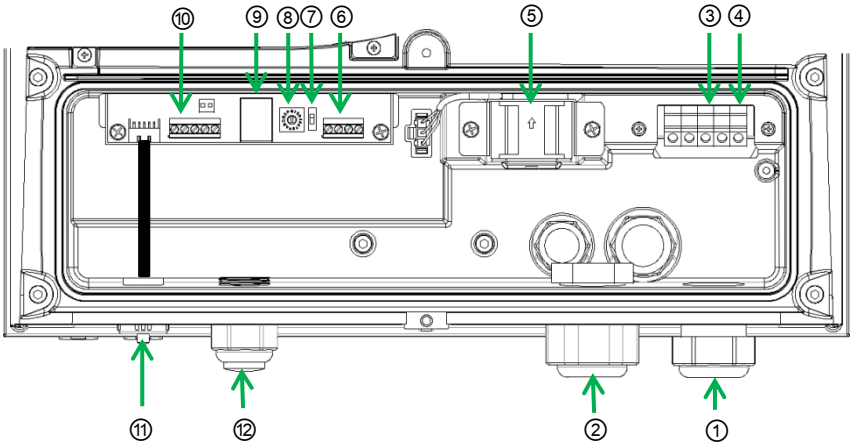

PV-15000T-U/ PV-20000T-U

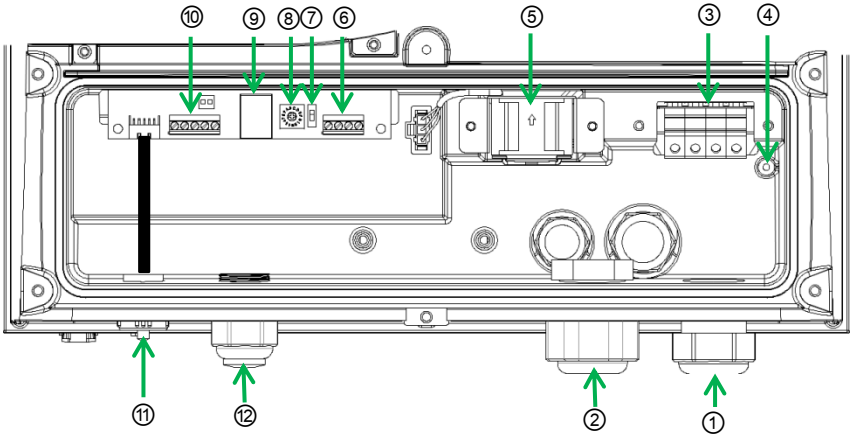

PV-30000T-U/PV-40000T-U

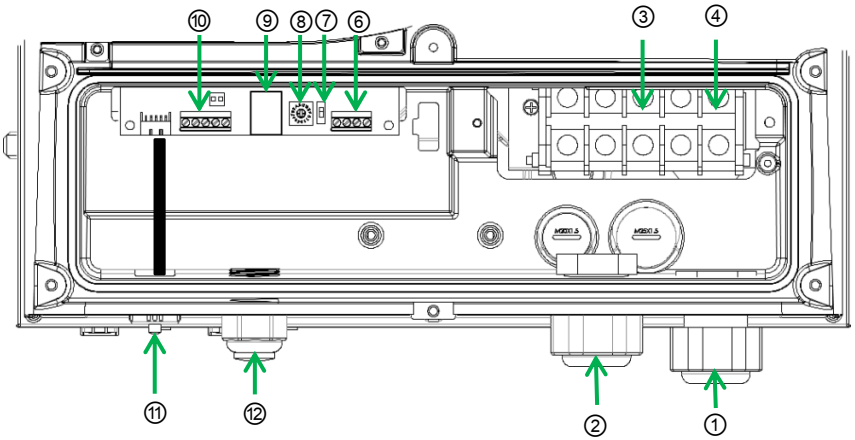

Note on AC Circuit Breakers

For safety reasons, place an independent circuit breaker between inverter and grid BEFORE all connections. Make sure inverter will be safely disconnected from the grid in all circumstances. It is recommended to use certified 20A/250Vac (PV-10000T-U) or 30A/250Vac (PV-15000T-U) or 35A/250Vac (PV-20000T-U) or 60A/250Vac (PV-30000T-U) or 60A/277Vac (PV-40000T-U) circuit breakers.

AC Wiring

1. Prepare cables as recommended below

Cross Section (mm^2)	Maximum Length for 1% Loss (M)				
	PV-10000T-U	**PV-15000T-U**	**PV-20000T-U**	**PV-30000T-U**	**PV-40000T-U**
2.5	9	N/A	N/A	N/A	N/A
4	14	N/A	N/A	N/A	N/A
6	21	14	N/A	N/A	N/A
10	N/A	23	17	N/A	N/A
14	N/A	N/A	24	16	15
22	N/A	N/A	N/A	24	22

Table above is based on single-core copper wires with maximum temperature rise of 90°C. It is considerable to adjust according to the installation condition such as ambient temperature, wiring surrounding, heat dissipation and regulation of local grid code.

Please follow local standards if figures are different from above.

2. Remove strip insulation about 9 or 10 mm

PV-10000T-U

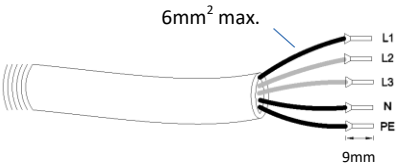

PV-15000T-U

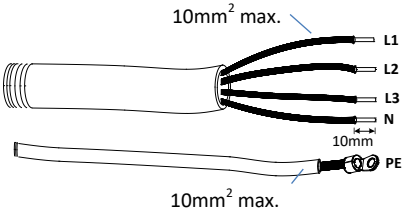

PV-20000T-U

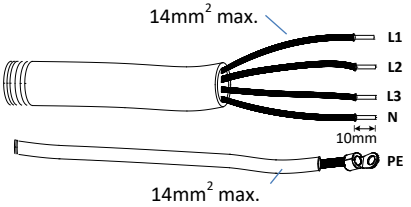

PV-30000T-U/PV-40000T-U

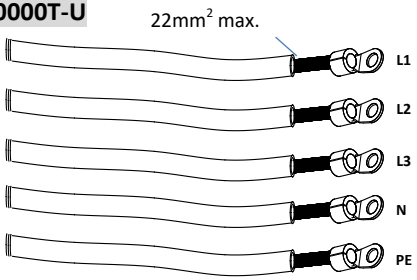

3. Remove an appropriate length of insulation layer from the AC cable then put on the crimp terminal and crimp it properly.
4. Loosen the cable gland 2 then remove the waterproof rubber sealing plug.
5. Insert AC cable through M32 rubber sealing and hole. Arrange the L1/L2/L3 AC cable through the cable gland 2 wiring hole.
6. For PV-10000T-U fix L1 (Line 1), L2, L3, N (Neutral), PE (⏚) on terminal block from left the right by using a 4.0mm diameter screwdriver. For PV-1500T-U/PV-20000T-U, fix (L1/L2/L3/N) on AC terminal block left to right and PE (⏚) on the AC to ground (PE) stud next to the AC terminal block. For PV-30000T-U/PV-40000T-U, fix (L3/L2/L1/N/PE) on AC terminal block from left to right.
7. Tighten the cable gland 2 after the configuration is completed to secure the cables.
8. Loosen the cable gland 1 then remove the waterproof rubber sealing plug.
9. Arrange the model ground wire (PE) and N through the holes of the cable gland 1 through the wiring.
10. Tighten the cable gland 1 after the configuration is completed to secure the cables.

PV-10000T-U

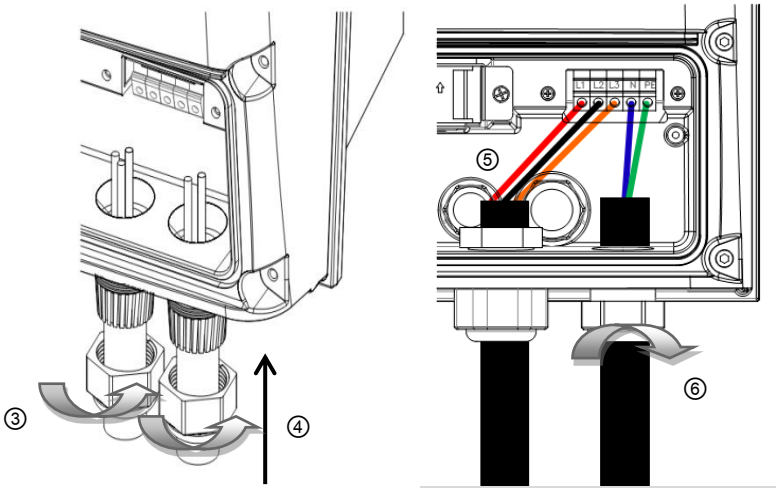

PV-15000T-U/PV-20000T-U

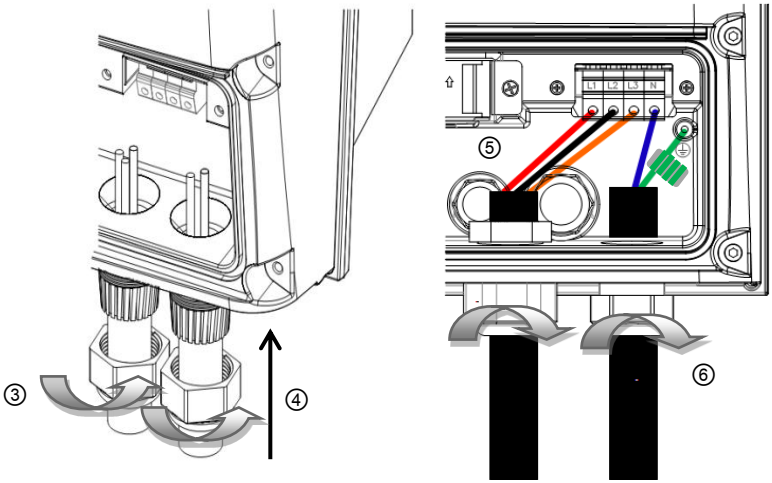

Only PV-15000T-U need to add EMI core at ground cable

PV-30000T-U/PV-40000T-U

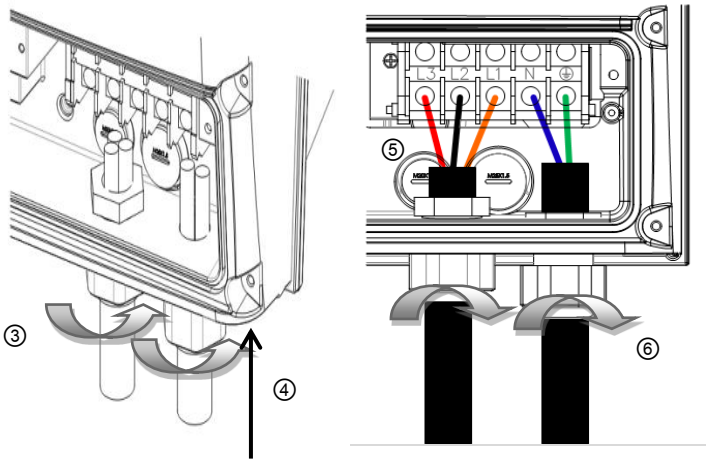

The EMI core in figure above comes from item Ⓕ in PV-15000T-U on P.12 Please make sure the GND cable (green) is wound thru a grey EMI core with 4 turns for noise immunity, as illustrated above.

Note on Wire Selection

It is recommended to use solid cables to ensure steadfastness of cables on terminal block. If stranded wires are used, apply core-end materials enclosed in accessory kit for all sakes.

Ripple Control Receiver (RCR)/RS485 and RJ45 Connections

1. Loosen the cable gland (M25) then remove the rubber sealing plug.
2. Insert wires from rear of guidance and holes of rubber sealing (M25).
3. Refer to Ch. 7.3 on page 43 for proper RS485 connections. Please choose UL2464 computer cable (Pair Type).
4. Refer to Ch.8 on P.51 for proper RCR connections.
5. Connect RCR/RS485 and RJ45 wires as shown below.
6. Make sure RJ45 wires is wound through a grey EMI core (from accessary kit), as for noise immunity.
7. Tighten cable gland to secure cables firmly in position.

RJ45

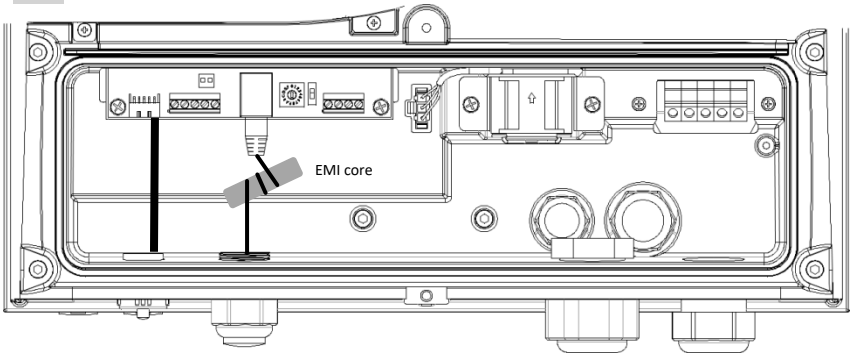

RS485 & RCR

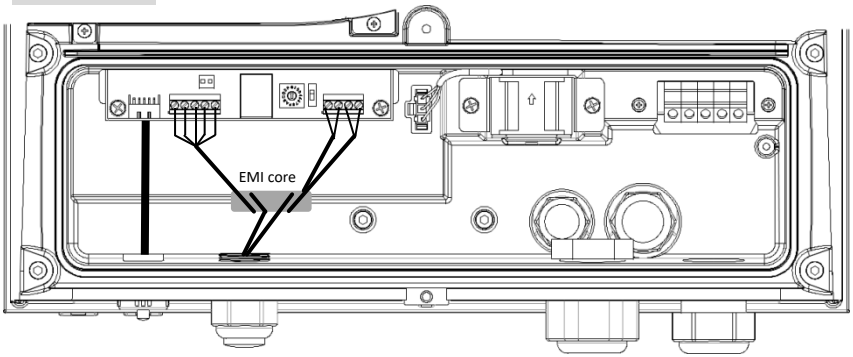

■ Closing the Front Cover

After connecting all wires, please

1. Inspect all the connections again.
2. Close front cover and tighten 4 screws gently. The torque should not exceed 30kgf-cm.
3. Check for any openings in between front cover and inverter.

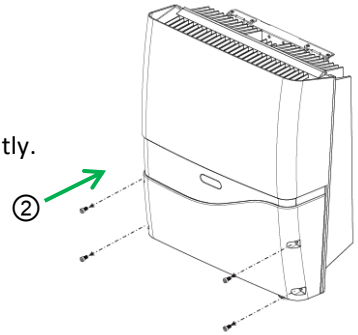

■ DC (PV) Wiring

1. DC Input Ratings

MODEL / Rating	PV-10000T-U	PV-15000T-U	PV-20000T-U	PV-30000T-U	PV-40000T-U
Recommended Max. DC Power(W)	<12000	<18000	<24000	<36000	<48000
Max. DC (V)	1000				1100
Max. Current (A)	11.5A/string 1 11.5A/string 2 23A in total	23A/string 1 11.5A/string 2 34.5 A in total	23A/string 1 23A/string 2 46 A in total	35A/string 1 35A/string 2 70 A in total	35A/string 1 35A/string 2 70 A in total
MPPT (Input Pairs)	2 (2 inputs)	2 (3 inputs)	2 (4 inputs)	2 (6 inputs)	2 (6 inputs)

2. Use either of the following recommended connectors
   1. Multi-Contact MC4
   2. Wieland PST40i1C
3. Connect to PV Array

After all the associated cables and connectors have been prepared

1. Remove sealing plugs as depicted as below.

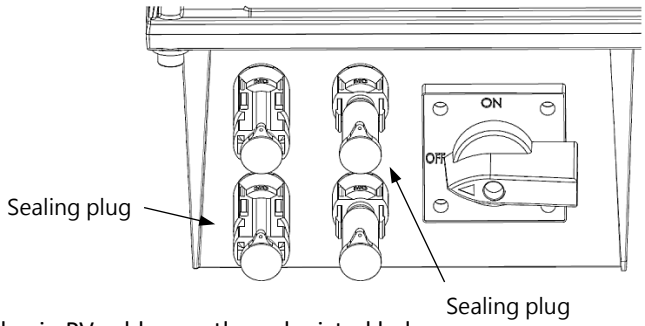

2. Plug in PV cables gently as depicted below

PV-10000T-U

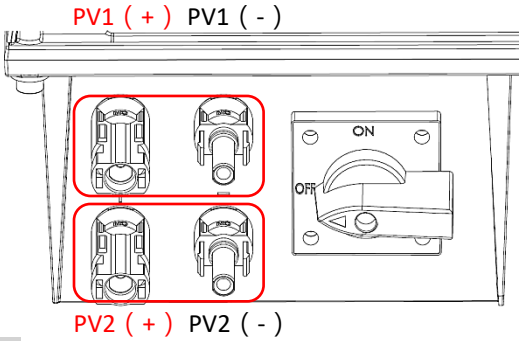

PV-15000T-U

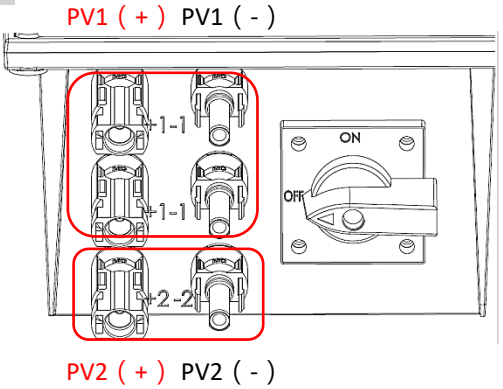

PV-20000T-U

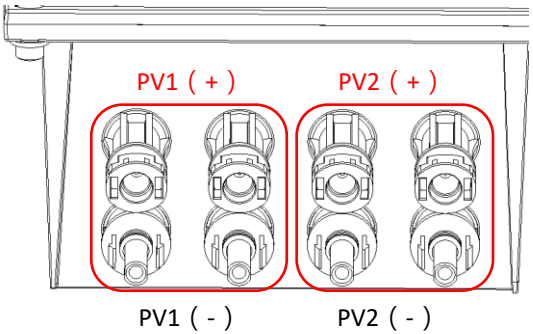

PV-30000T-U/PV-40000T-U

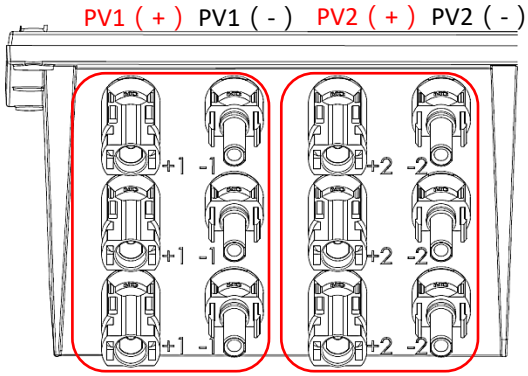

Danger of Electric Shock!

While working on DC wiring, make sure DC is completely turned off.

Polarity & Voltage Check

Before plugging in, make sure all polarities and voltages are correct. Incorrect connections could cause malfunction.

Note on Connection

Only arranges a string of PV Array connecting to a set of MC4 connectors.

Keep the Sealing Plugs

Please keep those plugs in a safe place. You may need to use them again to plug back the sealings to the DC terminal in case the DC wirings are removed.

Remind!

1. Using the 1000Vdc, 15A or 16A of circuit breaker (or fuse) (per string) on PV-10000T-U / PV-15000T-U / PV-20000T-U / PV-30000T-U), between PV module and PV inverter. PV-40000T-U must use 1100Vdc rating of circuit breaker (or fuse).
2. Only non-grounding PV module which is complying with IEC 61730 class A is applicable, user is suggested to consult with system installer for PV module type selection.

Notice

In order to avoid fuse broken, please do not parallel multiple DC strings prior to connect DC input if you choose the models (PV-30000T-U/PV-40000T-U) with DC fuse built-in.

Unplugging PV

In case you need to disconnect the PV, follow the steps below.

1. SWITCH OFF PV DC Switch!
2. Use disconnecting mounting tool (MC PV-MS) to disconnect the MC4 connectors.
3. Push interlock to release the DC plugs
4. Pull off the DC plugs

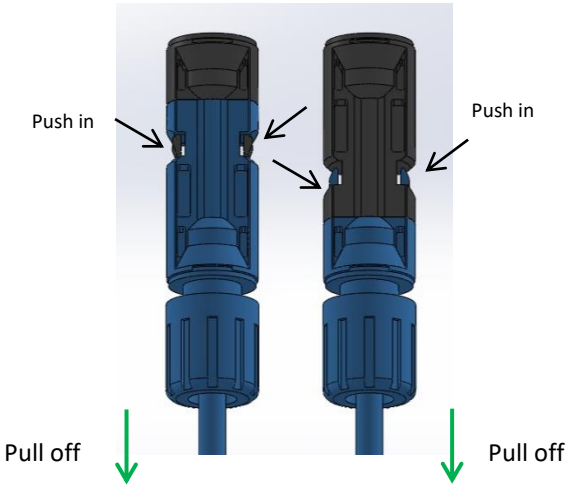

Be Sure to SWITCH OFF PV

Direct pull-off of DC plugs can lead to dangerous sparks. Be sure to switch off PV beforehand.

6.6 Ready to Start

Checklist

Before starting the inverter, please check the following items:

Item	Check Points	Checked?
Mounting	• Inverter is firmly mounted on bracket(s)	
AC Wiring	• All cables are firmly fixed on terminal block • Polarities are matched • Protective Ground is available • Cable gland is tightened firmly	
RS485 RJ45 Ripple Control Receiver	• All terminals are secured • Polarities are matched • Wires are tightened by cable gland • If not used, sealing plugs must be plugged in the terminal properly for protection.	
Front Cover	• Front cover is firmly attached • All screws are secured	
DC Wiring	• All plugs are firmly connected • Polarities are matched • Strings are not mixed wired (for multiple MPPT models)	

Changing Grid Connection and Operation Parameters

If you need to change grid connection settings and/or operation parameters including voltages, frequency range, power factor and power limitation, please contact your local authorized service provider for a “Parameter AP setting program” with corresponding manual to execute the relating parameters adjustment.

Start-up Procedure

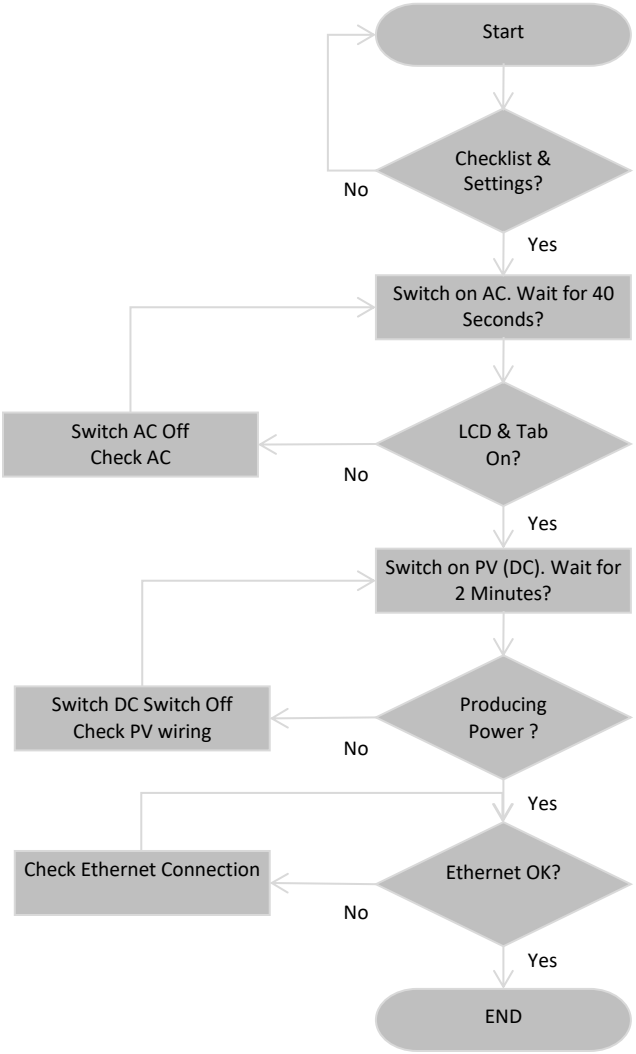

7. Operation

7.1 Overview

- LCD Display

ES-Series features with the LED indication light and 16*2 character type of LCD display.

The LCD display contents include of output power, grid voltage & current, PV module voltage & current, energy of today, totally energy, totally operation time, grid code, model name and firmware version, error messages, Modbus address.

- Button icon

Icon	Description	Note
A	LED A · Reference LED fault table A	
B	LED B · Reference LED fault table B	
C	LED C · Reference LED fault table C	
	Button, detection time is more than 100ms after pressing the button.	

LED C is on about 40 seconds when AC turns on.

■ LED fault LED indication

LED fault table

LED A	LED B	LED C	Error Message
OFF	OFF	OFF	All Normal
ON	OFF	OFF	DC Current Injection High
OFF	ON	OFF	Relay(s) Failed
ON	ON	OFF	High Internal Temperature
ON	OFF	ON	GFCI Detection Failed
OFF	ON	ON	Bus Failed
Blink	OFF	OFF	Isolation Fault
OFF	Blink	OFF	Leakage Current High
OFF	OFF	Blink	Cooling Fan(s) Failed

Note：Blinking means LEDs on for 0.5 seconds and off for 0.5 seconds.

■ LCD window structure

When inverter connects to the grid and starts generating power, the LCM screen will show “Welcome”, than come to “Pac and Etoday” after 5 seconds. It will stay at this screen until the user push the button on LED panel to change the information frame on LCM screen. Please refer to below flow chart for sequence of on-screen inverter information frames.

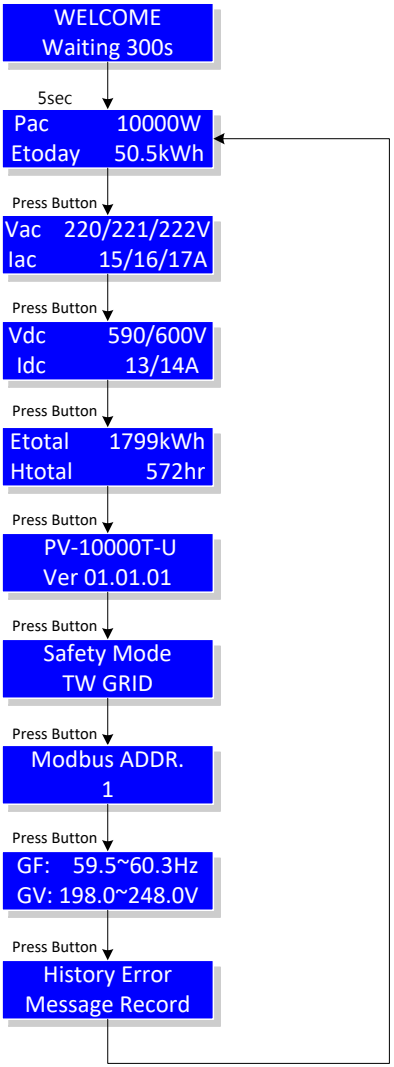

LCD operation frame

- WELCOME

The LCD displays the WELCOME screen after startup and start to count down by seconds according to each grid code regulation before feed into the grid. The screen will display Pac after connecting to the grid. This Waiting count down screen will only appear again if disconnected from the grid.

When the system is abnormal or the power of the solar module disappears, this screen will be stayed until the control power of inverter can be active.

Solar module enables control power to be re-established.

- Pac

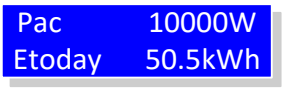

Pac is the instantaneous power generation being generated at the moment (unit: Watt), and E-today is the cumulative power generation that has been generated today (unit: 0.1kWh).

After being disconnected from the grid, it will be replaced by the WELCOME screen and will not appear again until the power grid is connected again.

- AC output voltage and current

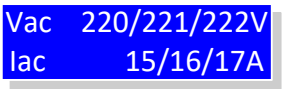

Vac represents the AC voltage (unit: V).
Iac represents the AC current (unit: A).

- DC output voltage and current

Vdc represents the DC voltage (unit: V).
Idc represents the DC current (unit: A)

- Etotal

Etotal is the total accumulated power generation in kWh.
Htotal is total accumulated operating time of inverter in hours (hr).

- Safety Mode (Grid code)

It indicates the local grid code regulation.

- Modbus ID Address

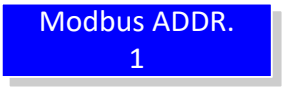

It indicated the Modbus ID address.

- Grid Voltage and Frequency

It indicated the grid setting.

- Product information

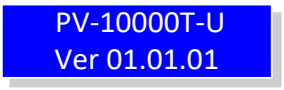

It indicated the inverter model name and firmware version as below
Ver $01_A.01_B.01_C$

A: Logger firmware version
B: Master of DSP firmware version
C: Slave of DSP firmware version

Error message

When inverter encounters an error, LCM screen enters error mode and an error message will be displayed on LCM screen continuously.

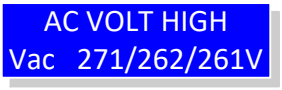

Below screen indicates that there is no abnormality.

Press the button for more than 5 seconds, it will enter to the History Error screen after display is blinking and button been released. When new abnormality (system error or malfunction) occurs, the screen will display the latest error information accordingly.

History error Information Frame

A total of 5 historical messages can be recorded. Number 1 is the latest.

Error message recorded, number 5 is the oldest error message recorded.

Historical error frame is shown a s below.

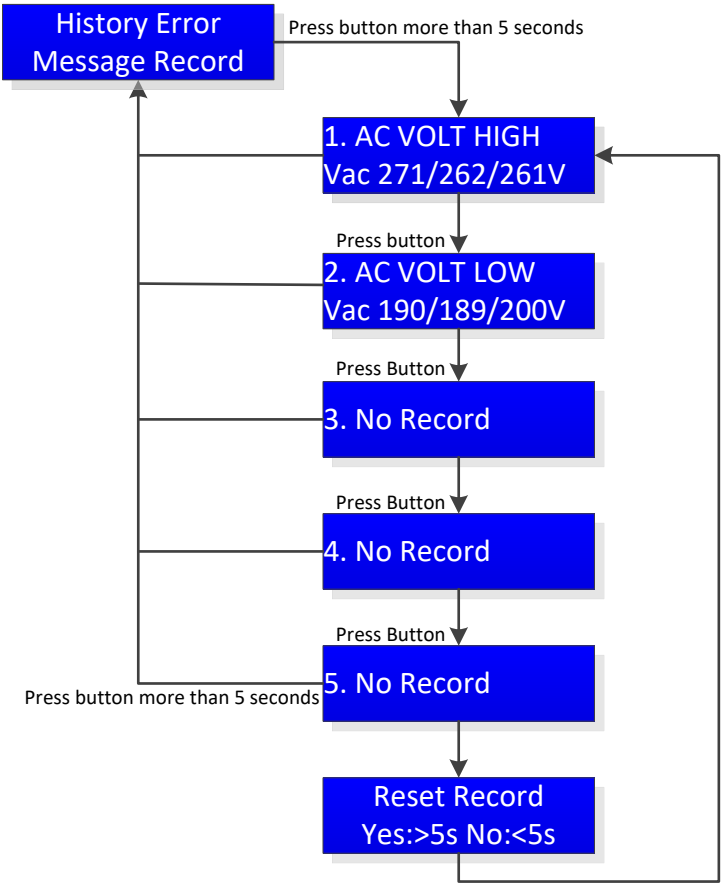

- Clear historical error record

Reset Record
Yes:>5s No:<5s

Press the ⊙ button for more than 5 seconds in the frame of “Reset Record”, release the button after the screen flicker, it will return to the first page of History Error and show “No Record” if the error messages have been successful clear.

➢ Quit history record

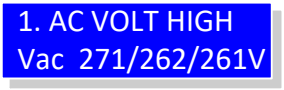

Press the button for more than 5 seconds in the frame of “History Error”, release the button after the screen flicker to quit the history error to the system error screen as above.

LCD backlight control

In order to save the control power consumption, the LCD module backlight will be only light on if one of below condition occurs.

1. A new error or abnormal event has occurred.
2. The button is pressed.
3. Firmware update is performing.

7.2 Network and Internet (RJ45)

- Accessing Inverter via LAN (Local Area Network)

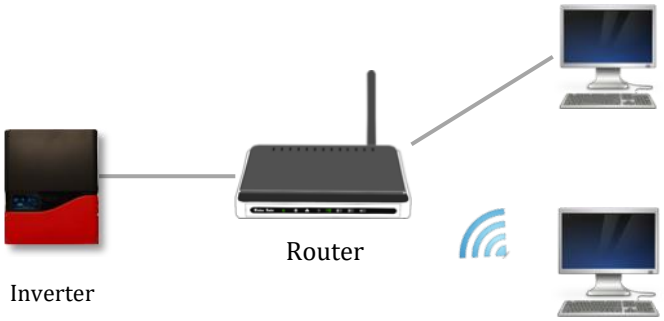

The illustration above is a typical LAN connection. The inverter and devices are connected to a router by Ethernet cable or Wi-Fi. Computers and other devices in the LAN can access inverter's data if its IP address is known.

The router, acting as a DHCP server, usually assigns an IP to the inverter automatically. You can also manually assign an IP to the inverter with the router as well. Press ⊙ to check IP address.

Accessing Inverter via Internet

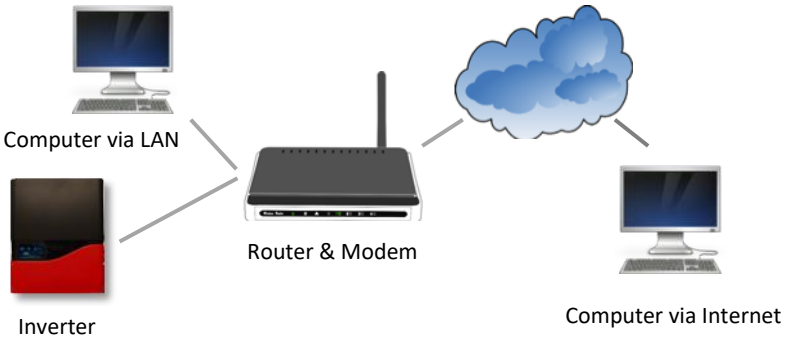

The illustration above demonstrates how to access the inverter via Internet. Similar to LAN, the inverter can be accessed by web browser. However, there is usually a firewall that would block direct access of the LAN from the Internet. In order to overcome this, you will need to set up NAT (Network Address Translation) or Port Forwarding of the router. For detailed information, please refer to the manual provided by your router supplier.

7.3 RS485

7.3.1 About RS485

A typical RS485 connection is as below.

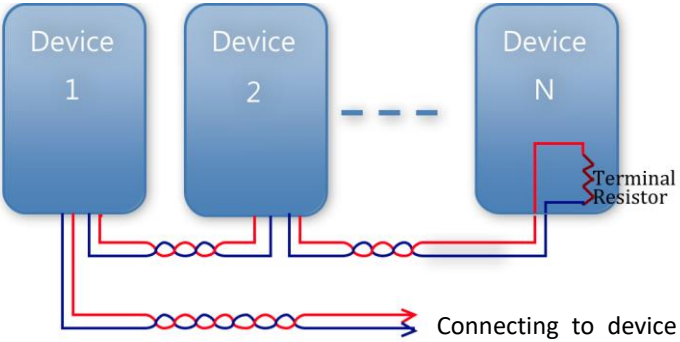

Some Noteworthy Points:

1. Wires between devices and computer shall be twisted.
2. Maximum allowable wire length is 1000 meters.
3. The terminal-end device should have a terminal resistor.
4. Due to multiple connections, each individual device should be assigned an IP address as to send/receive.

7.3.2 Connecting RS485

- Wiring Diagram

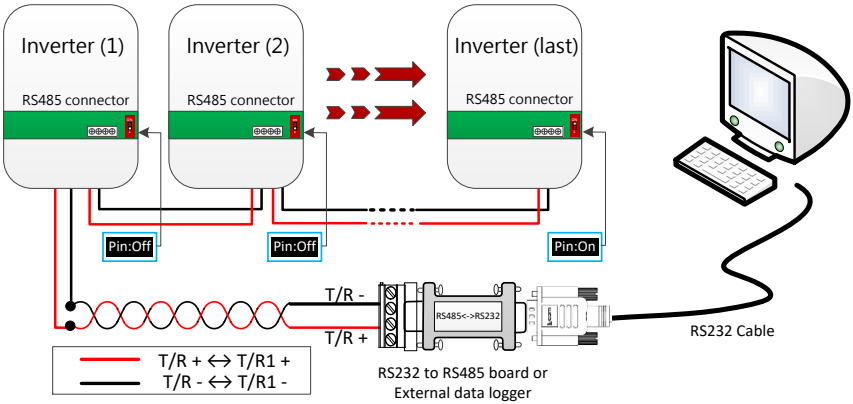

1. Connect T/R1+ and T/R1- of inverter RS485 connector to the T/R1 and T/R1 of an external data logger respectively.
2. Between two inverters, match T/R2+ of first inverter with T/R1+ of next inverter and connect T/R2- of first inverter with T/R1- of next inverter.
3. Set terminal resistor switch "ON" of the terminal-end inverter (last inverter of the row) only. The others' should be set as "OFF."

Inverter hardware interface

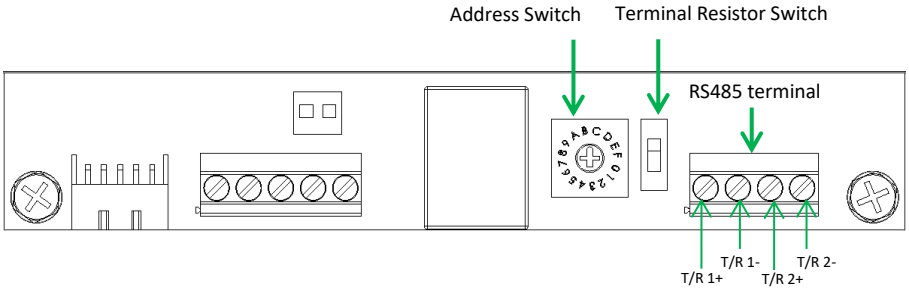

Address Setup

To do this setting, use the address rotary switch shown on right. For a single inverter, set the position to "1"; for multiple inverters, please assign them different positions with no duplications. Since only 15 positions (1~F) are available, the maximum number of inverters that can be grouped at a time in a RS485 bus is 15. Position "0" is reserved for broadcast purposes when multiple inverters are employed. Please do not use in all circumstances.

Setting the Terminal Resistor

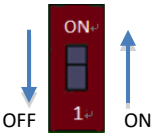

Each inverter has built-in terminal resistor, if RS485 is connecting to multiple inverters or the total communication length is too long to cause the abnormal communication, please set the terminal resistor switch to "ON" of the last inverter in the row connection, all other remaining inverters shall switch to "OFF".

ON Terminal Resistor is active

1 (OFF) Terminal Resistor is invalid

Attention!

Incorrect settings could cause communication failure.

7.4 Browsing Inverter Web Page

■ Operation

By connecting inverter to a network, you can access the inverter by web browser such as Internet Explorer, Firefox and Safari. Follow the steps below to explore the web page of inverter.

1. Make sure you have successfully connected inverter to a LAN by either Ethernet or Wi-Fi.
2. Read inverter's IP address either on the inverter LCM screen or can be obtained by logging in to the router to find the corresponding MAC address.
3. Open a web browser on your desktop/laptop, key in the IP address you have read previously at the address bar (Refer to figure below. The example IP address here is 192.168.10.122).
4. Entering to the inverter page to view all the power generation and other information.

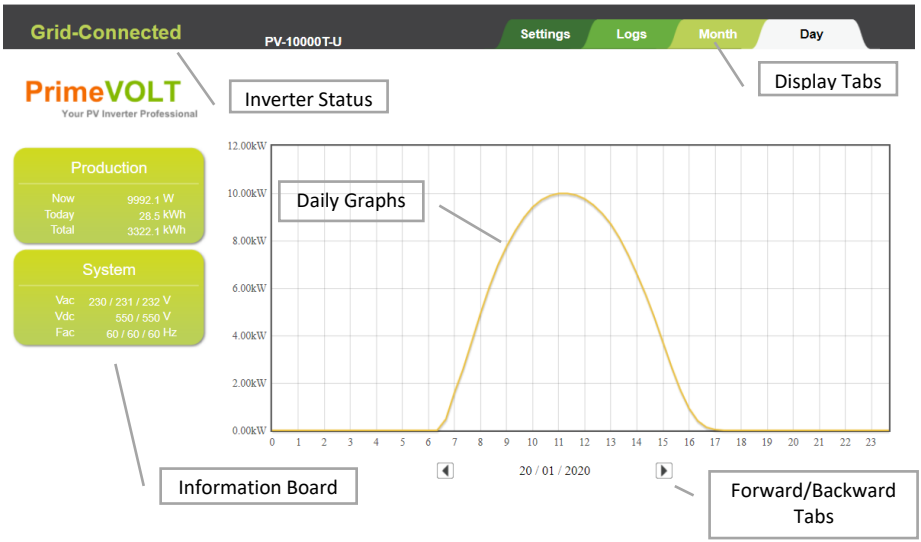

■ Overview

Display Tabs: There are four selected menu.

1. Setting: Information and set-up of inverter. When in Settings, you will see the table below.

Inverter Info.	PV-10000T-U	**Date & Time**	Oct/1/2019 11:02:00
Voltage Range	194.0 ~ 264.0 V	**Frequency Range**	47.50 ~ 51.50 Hz
Grid Regulation	VDE-AR-N 4105		
IP Address	192.168.1.121	**Wi-Fi**	(Edit)
		Language	English
Feed-in Rate	$0.32	**Administration**	Admin
UPLOAD	(Edit)		

Login the user name and password to modify the relevant setting value.

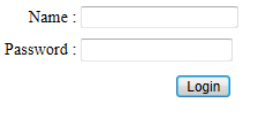

a. Inverter Info. : Name, serial number and F/W version.

b. Time & Date: Clock of inverter. You can set the time zone and synchronize with time server automatically.

c. Voltage Range: Operating voltage range of inverter.

d. Frequency Range: Operating frequency range of inverter.

e. Grid Regulation: The grid code regulation of inverter.

f. IP address: The assigned IP address of inverter.

g. Wi-Fi: Settings of Wi-Fi connection,

   a) Wi-Fi SSID.

   b) WI-Fi Password: The key or password of your WLAN.

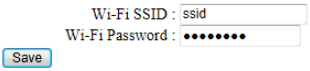

h. Language: Language selection.

i. Feed-in Rate: The feed-in tariff. There are graphs displaying your earnings in accordance to the rates you entered.

j. Administration: User name and password. The default name and password are both “admin”.

Cloud Monitoring：Go to http://mypowermanager.net to download the user manual of cloud and register your user account to set up your inverters for cloud monitoring.

2. Logs: Event records of inverter. Events include activities and errors of inverter. See picture below for demonstration

Time	Type	Event
2019/01/02 07:44:11	Warning	AC ABSENT
2019/01/31 07:33:45	Information	System Started
2019/03/05 12:34:56	Warning	PV VOLT HIGH
2019/05/35 07:14:41	Warning	AC VOLT HIGH
2019/07/10 14:23:38	Warning	AC FREQ HIGH
2019/08/12 07:11:45	Information	System Started

3. Month: Daily power generation graph of one month.
4. Day: 24 hours power generation graph of one day.

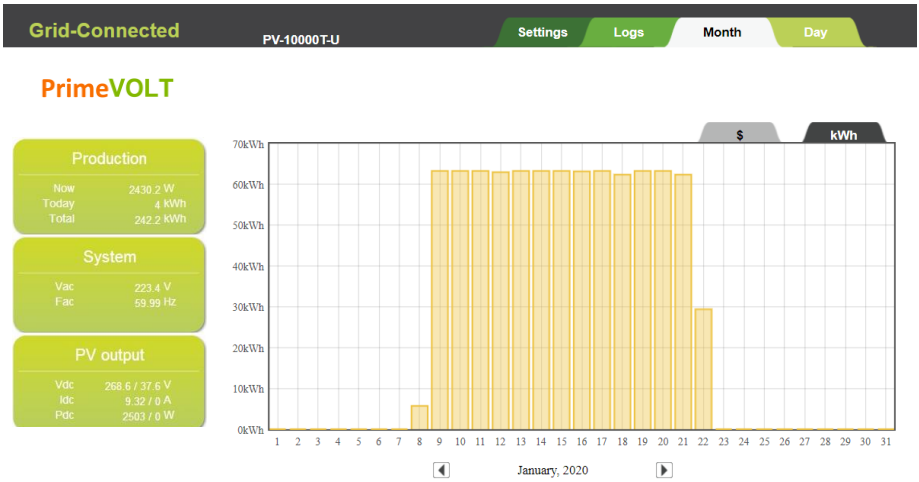

5. Inverter Status: Showing current operation status. During the night and/or when inverter is not working, the area is black. When an error or failure happens, a message will pop up.

6. Information Board: Displays power generation and relevant system parameters. During the night, while inverter is not working, the “system” data will not be viewable.
7. Forward/Backward Tabs: Move current display forward or backward.

7.5 Using USB

Plugging in USB Stick

To download the inverter data, please plug in a pre-formatted USB memory into the USB interface beneath inverter. *The stick must be FAT or FAT32 formatted.*

Remove the cap and plug in a USB stick. If inverter recognizes the device, the USB icon on LCD screen will light up.

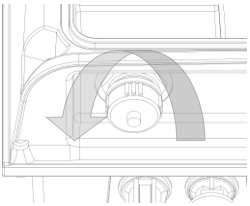

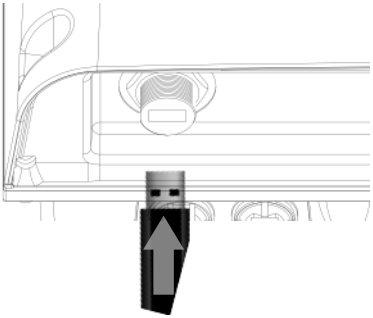

Downloading Inverter Data

After plugging in the USB, all data stored in the inverter will be downloaded to the stick automatically.

Data Format

There will be three data files downloaded. ErrorLog(errors record), Power (historical power generation record) and inverter2.sqlite.

Note on Firmware Upgrade

If the USB stick contains an update of firmware, the inverter will not download data into USB stick but perform firmware upgrade instead.

Setting PF and 70% Power Limit

Only authorized person can set the PF and 70% power limit. Please contact your local service provider.

Capacity of Memory

In general, the inverter can store about 3-years data. If the data is older than 3 years or over the memory storage space, it will be overwritten automatically.

Back Up Inverter Data Periodically

Once the data in logger has been deleted, it cannot be retrieved. It is highly recommended to back up your inverter data periodically if you need to retain all the recordings.

8. Connecting to Ripple Control Receiver (RCR)

A RCR receives control signals from your power company. PV series inverters can be connected to RCR directly. Inverters will be able to receive command from RCR and adjust their AC output powers to the corresponding level. A typical RCR installation is illustrated below.

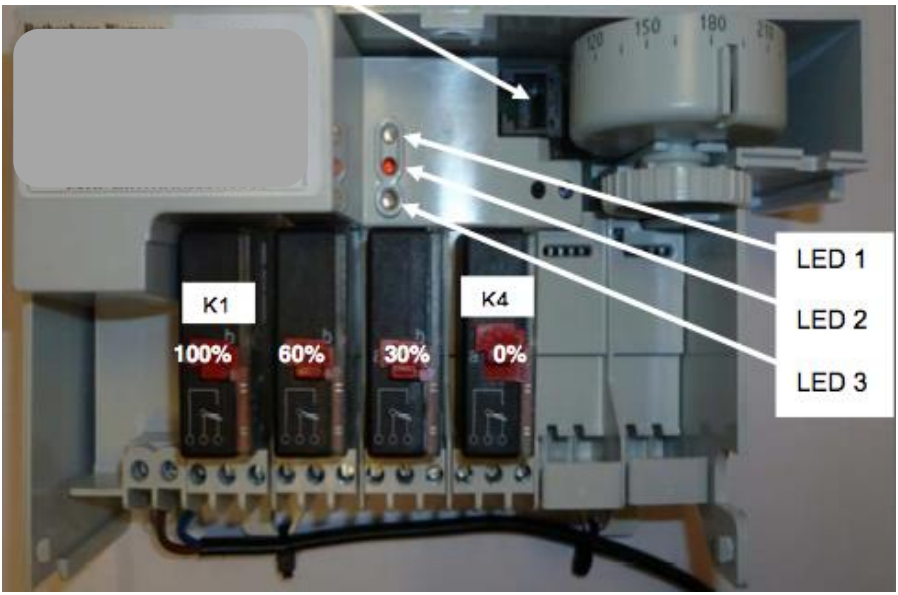

Connections with Single Inverter

When connecting a single inverter only, refer to the figures below.

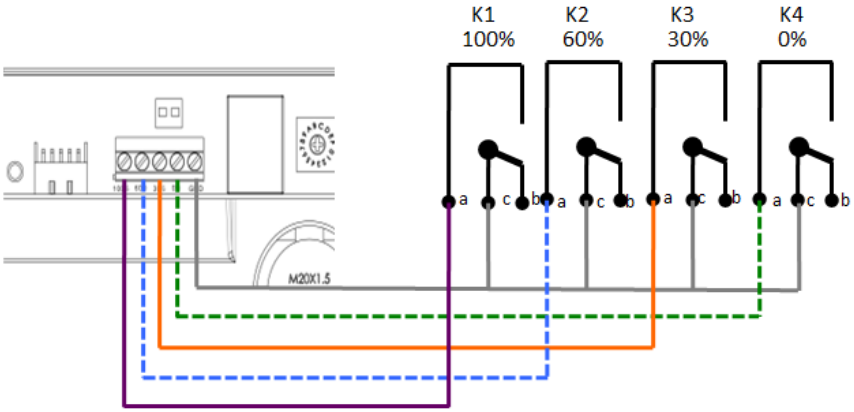

Connections with Multiple Inverters

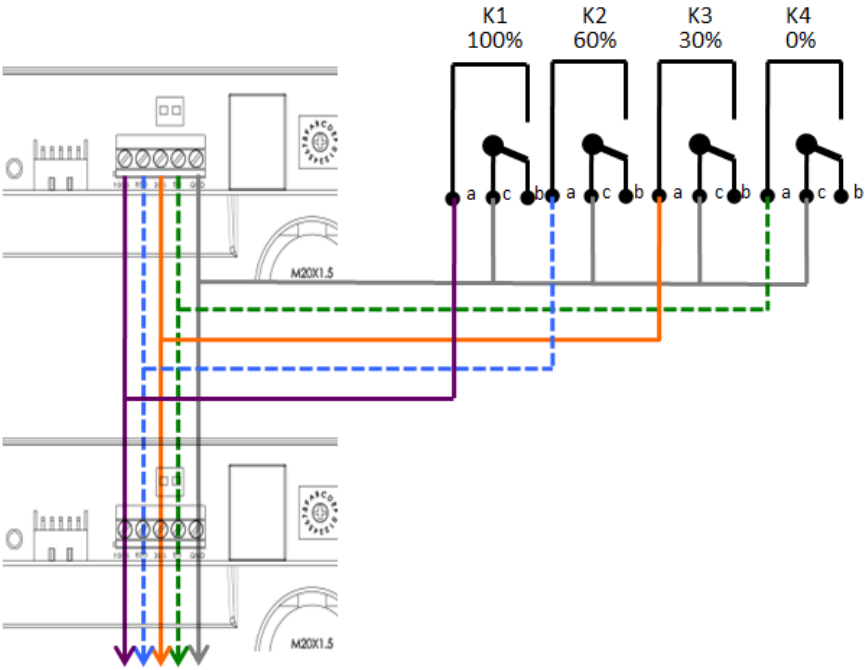

To Other Inverters

RCR Information

To set RCR, you need a setting tool from your inverter supplier. Users cannot do the settings via inverter webpage.

K1	K2	K3	K4	Active	Power
○	○	○	○	○	100%
○	○	○	◉	◉	0%
○	○	◉	○	◉	30%
○	○	◉	◉	○	75%
○	◉	○	○	◉	60%
○	◉	○		○	70%
○	◉	◉	○	○	10%
○	◉	◉	◉	○	50%
◉	○	○	○	◉	100%
◉	○	○	◉	○	20%
◉	○	◉	○	○	100%
◉	○	◉	◉	○	0%
◉	◉	○	○	○	60%
◉	◉	○	◉	○	70%
◉	◉	◉	○	○	20%
◉	◉	◉	◉	○	90%

Signal Length	2 Secs
Fallback Active	Yes
Fallback Time	10 Mins
Fallback Power	100%

1. K1 ~ K4: The relays on RCR.
2. Active: When selected, relays K1 ~ K4 will be active.
3. Power: The corresponding limit on AC output power of inverter.
4. Signal Length: The minimum time required to activate a power limit.
5. Fallback: A fallback is an operation state which the inverter can enter if relays K1~K4 is not active in the table.
6. Fallback Active: When selected, fallback will take place.
7. Fallback Time: The time required if the input status is not valid.
8. Fallback Power: The power limit for fallback.

9. Maintenance

To keep retain the inverter in best performance, it's recommended to do the following on a regular basis.

1. Make sure no object is placed on the top of inverter.
2. Dust off the inverter, especially the heat sink located on the top of inverter.
3. Monitor the power generation figures/graph and operation. Are in normal condition.
4. Inspect all wires and cables to ensure no corrosion or fracture.
5. Inspect all connectors to ensure they are not loose.

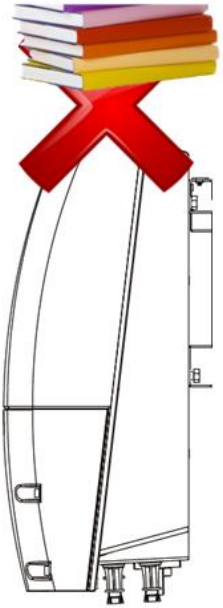

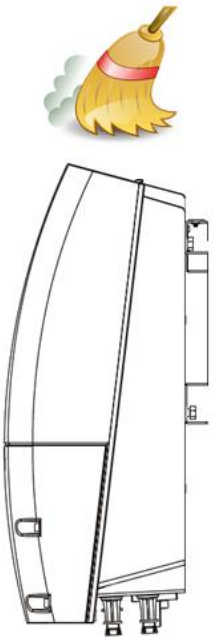

10. Troubleshooting

In cases where an inverter detects a problem, an error message may be conveyed by the system. Use the table below to resolve accordingly. Please exchange the abnormal inverter with the other normal one to compare the difference and status.

If the problem still persists, please contact your local service provider for further assistance.

Trouble	Treatment
1. *No display* 2. *No status LED*	1. Check AC connection such as fuse, breaker and wiring 2. Be sure AC is connected to inverter properly 3. Check AC voltage L1/L2/L3 to N on terminal block are proper (>100Vac) 4. Switch off AC and switch on again
1. *No generation* 2. *Can't read AC and DC message on LCD*	1. Check PV connection and wiring 2. Check PV polarity 3. Check PV voltage (>160Vdc) 4. Wait for stronger sunlight
Error on display	1. Refer to error table in Error Frame section 2. Error other than "C#": Read related meaning and take suitable action 3. "C#" Error: Switch off the AC breaker then the DC. Then switch on the DC and then the AC again 4. If "C#" error continues, please contact with local service to check the "C#" error
Generated power is less than expected	1. Check module installation environment 2. Ensure inverter is not in direct sun light 3. Remove any objects on the inverter 4. Check its ambient temperature
Fan Fails IN *Fan Fails EX*	1. "Fan Fails IN" means internal small fan abnormal. 2. "Fan Fails EX" means external big fan abnormal. 3. See whether there is any obstacle stocked in the fan 4. If fan still cannot rotate, please call service and replace it by referring the Fan Replacement SOP For brand and model of fan, please contact with local service

Error code Table-1

Error Condition	Error Code	Indication
AC voltage high	E1	Step1: Check environmental condition, AC Voltage and Frequency. Step2: Check the LCM AC Voltage and Frequency Setting Range. Step3: If environmental condition is over the inverter setting. Please adjust related parameters.
AC voltage low	E2	
AC absent	E3	
AC frequency high	E4	
AC frequency low	E5	
DC voltage high	E6	Step1: Check the panel voltage, Is it within the operating range? Step2: If the PV Voltage is over 1000V, Please adjust the number of panel connections.
PV insulation low	E7	Step1: Confirm that the panel has abnormal impedance to the earth. Step2: If the error code is happened in the early morning or dusk. It is parasitic capacitance connect Panel with earth, It is a normal phenomenon. Step3: If it continues to occur, please replace another inverter.
Ground current high	E8	Step1: Confirm that the panel has abnormal impedance to the earth. Step2: If the error code is happened in the early morning or dusk. It is parasitic capacitance connect Panel with earth, It is a normal phenomenon. Step3: If it continues to occur, please replace another inverter.

Error code Table-2

Error Condition	Error Code	Indication
DC current injection is too high	C1	Step1: Please replace another inverter. Step2: If it still occurs, contact the supplier.
Output relay test failed	C2	Step: The inverter is damage. Please replace another inverter.
Internal temperature is higher than 90℃	C4	Step1: Check if the cooling space of the inverter is enough. Step2: Please turn off DC. Step3: Restart after 10 minutes. Step4: If it still occurs, please contact the supplier.
GFCI detector failed	C5	Step: The inverter is damaged, please replaced by another inverter.
DC input is shorted by controller for self-protection	C6	It's reserved code for other application.
AFD (Active Frequency Shifting) test failure	C7	Step 1: Check environmental condition, AC Voltage and Frequency. Step 2: Check if it is wrong installing? For Example, L1 of the grid connected to L1 and L2 of the inverter. 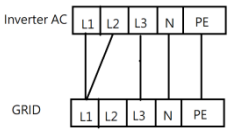 Step 3: If environmental is normal, please contact the supplier.
Fan Fails IN Fan Fails EX	N/A	Step1: Please turn off AC and DC. Step2: Check the Fan and Clean it. Step3: If it continues to occur, please replace another fan.

Error code Table-3

Error Condition	Error Code	Indication
Bus under voltage	F1	Step1: Please turn off AC and DC. Step2: Restart after 10 minutes. Step3: If it continues to occur, please replace another inverter.
Bus over voltage	F2	Step1: Please turn off AC and DC. Step2: Restart after 10 minutes. Step3: If it continues to occur, please replace another inverter.
Internal communication loss	F3	It's inverter's master CPU and auxiliary CPU communicates abnormally.
Master expect slave firmware version not correct	F4	It’s reserved code for other application.
EEPROM fail	F5	It’s reserved code for other application.
Consistent warning	F6	It's inverter's master CPU and auxiliary CPU detect fail.
Inverter over current	F7	It's the Grid protection. Check if it is wrong installing? For example, L1 of the grid connected to L1 and L2 of the inverter. 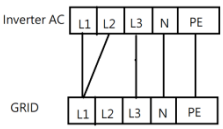

11. Specifications

Model	Unit	PV-10000T-U	PV-15000T-U	PV-20000T-U
Input (DC)				
Max. DC Voltage	V	1000		
Working Range	V	180 ~ 980		
Recommended Max. Power	W	<12000	<18000	<24000
MPPT Range (full load)	V	500 ~ 850		500 ~ 780
Feed-In Voltage	V	260		
Max. DC Current	A	11.5/string 1 11.5/string 2	23/string 1 11.5/string 2	23/string 1 23/string 2
No. of MPPT		2		
I_{SC} PV	A	14/string 1 14/string 2	28/string 1 14/string 2	28/string 1 28/string 2
Max. backfeed current to array	mA	1.0		
Surge protector	kA	6.5		
Output (AC)				
Nominal Power	W	10000	15000	20000
Apparent Power	VA	11200	16700	22300
Nominal Voltage (L-N/L-L)	V	220/380; 230/400; 240/415		
Voltage Range	V	184 ~ 264.5[1]		
Nominal Frequency	Hz	50/60		
Power Factor		-0.8 ~ +0.8		
Maximum Current	A	17.0	26.0	34.0
Max. O/P Over-Current Protection	A	30	45	66
Inrush Current	A/mS	30/0.2	45/0.2	66/0.2
Max. O/P Fault Current	A/mS	50/0.5	50/0.5	100/0.5
Efficiency				
Max. Efficiency	%	98.3	98.3	98.4
Euro- eta	%	98.0	98.1	98.1

[1] Voltage Range: 184~264.5 for VDE-AR-N 4105

Model	Unit	PV-10000T-U	PV-15000T-U	PV-20000T-U
General				
Operating Temp.	℃	-25 ~ 60		
Temp. (Full Power)	℃	-20 ~ 45		
Topology		Transformerless		
Protection		IP66		
Humidity	%	0 ~ 100%		
Cooling		Forced Air-Cooling		
Protection Class		I		
Overvoltage Cat.		DC Input: II, AC Output: III		
Environment Cat.		Pollution Degree III (outside)		
Altitude	m	< 4000		
Noise	dB	< 45		
Features				
LCD		1602 character type (ES-Series)		
RS485		Standard, half-duplex		
Power Reduction		Yes, via USB with authorized software		
Wi-Fi		Optional by USB dongle (Type of dongle is specified by PrimeVOLT)		
Data Logging		Yes, 3 years		
Web Server		Yes. Used to monitor power activity, and adjust inverter parameters/settings		
Clock Sync		Automatically sync with time server		
Mechanical				
W x H x D	mm	418x485x196		461x485x306
Weight	kg	21	25	40
Input Pairs		2	3	4
DC Switch		Built-in		

Model	Unit	PV-10000T-U	PV-15000T-U	PV-20000T-U
Compliances				
Grid Monitoring		VDE 0126-1-1/A1, VDE-AR-N 4105, PEA, MEA, AS/NZS 4777.2:2015		
Safety		IEC 62109-1, 62109-2		
EMC Emission		EN 61000-6-3 EN 61000-3-2 EN 61000-3-3 AS/NZS 61000.6.3	EN 61000-6-3 EN 61000-3-11 EN 61000-3-12 AS/NZS 61000.3	EN 61000-6-4 EN 61000-3-11 EN 61000-3-12 AS/NZS 61000.6.4
EMC Immunity		EN61000-6-2		

Note: Specifications are subject to change without prior notice.

Model	Unit	PV-30000T-U	PV-40000T-U
Input (DC)			
Max. DC Voltage	V	1000	1100
Working Range	V	180 ~ 980	180 ~ 1000
Recommended Max. Power	W	<36000	<48000
MPPT Range (full load)	V	500 ~ 780	625 ~ 850
Feed-In Voltage	V	260	
Max. DC Current	A	35/string 1, 35/string 2	
No. of MPPT		2	
I_{SC} PV	A	42/string 1, 42/string 2	
Max. backfeed current to array	mA	1.0	
Surge protector	kA	6.5	
Fuse	A	20 (Optional)	
Output (AC)			
Nominal Power	W	30000	40000
Apparent Power	VA	33400	44500
Nominal Voltage (L-N/L-L)	V	220/380; 230/400; 240/415	277/480
Voltage Range	V	184 ~ 264.5[2]	249 ~ 305
Nominal Frequency	Hz	50/60	
Power Factor		-0.8 ~ +0.8	
Maximum Current	A	51.0	54.0
Inrush Current	A/mS	100/0.2	120/0.2
Max. O/P Fault Current	A/mS	150/0.5	150/0.5
Max. O/P Over-Current Protection	A	100	120
Efficiency			
Max. Efficiency	%	98.5	98.5
Euro- eta	%	98.2	98.2
General			
Operating Temp.	˚C	-20 ~ 60	

[2] Voltage Range: 184~264.5 for VDE-AR-N 4105

Model	Unit	PV-30000T-U	PV-40000T-U
Temp. (Full Power)	°C	-20 ~ 45	
Topology		Transformerless	
Protection		IP66	
Humidity	%	0 ~ 100%	
Cooling		Forced Air-Cooling	
Protection Class		I	
Overvoltage Cat.		DC Input: II, AC Output: III	
Environment Cat.		Pollution Degree III (outside)	
Altitude	m	< 4000	
Noise	dB	< 55	
Features			
LCD		1602 character type (ES-Series)	
RS485		Standard, half-duplex	
Power Reduction		Yes, via USB with authorized software	
Wi-Fi		Optional by USB dongle (Type of dongle is specified by PrimeVOLT)	
Data Logging		Yes, 3 years	
Web Server		Yes. Used to monitor power activity, and adjust inverter parameters/settings	
Clock Sync		Automatically sync with time server	
Mechanical			
W x H x D	mm	461x485x306	
Weight	kg	46	
Input Pairs		6	
DC Switch		Built-in	
Compliances			
Grid Monitoring		VDE-AR-N 4105 AS4777.2:2015 IEC 61727, IEC 62116	VDE-AR-N 4105
Safety		IEC 62109-1, IEC 62109-2	
EMC Emission/Immunity		EN 61000-6-4, AS/NZS 61000.6.4 EN 61000-3-11, EN 61000-3-12, EN 61000-6-2	

Note 1: In order to avoid fuse broken, please do not parallel multiple DC strings prior to connect DC input if you choose the models with DC fuse built-in.

Note 2: Specifications are subject to change without prior notice.

12. Addendum

Efficiency Charts

PV-10000T-U

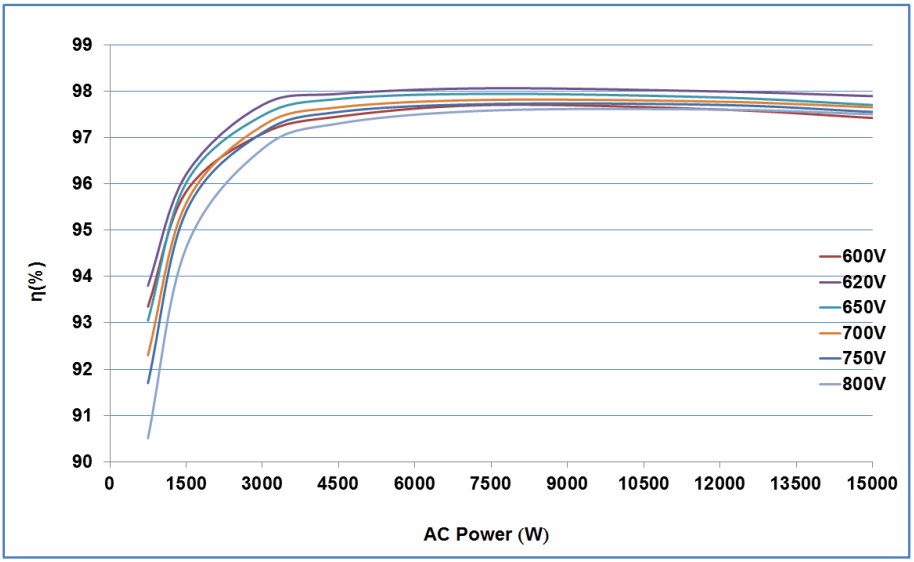

PV-15000T-U

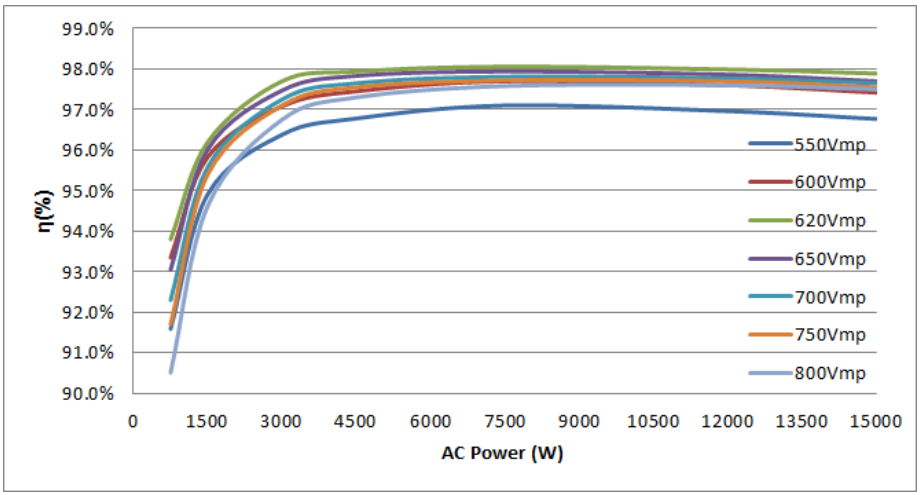

PV-20000T-U

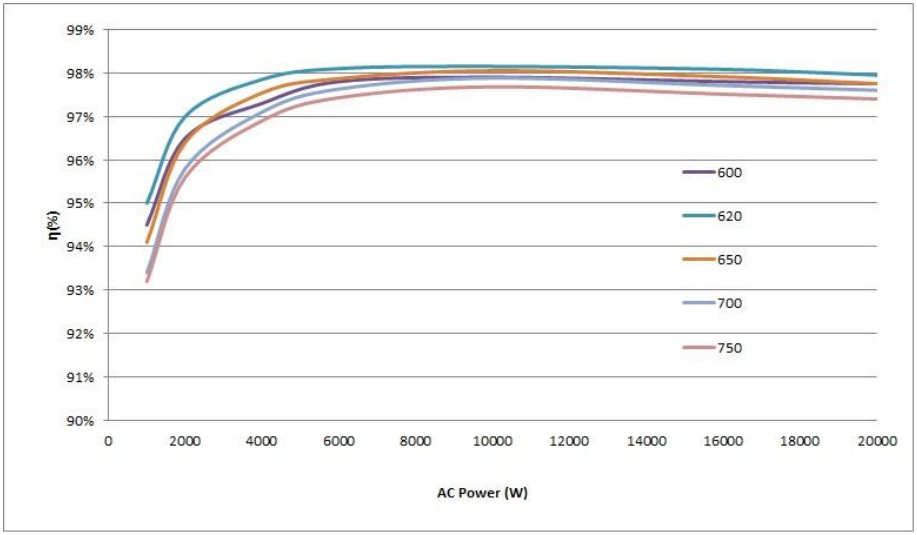

PV-30000T-U

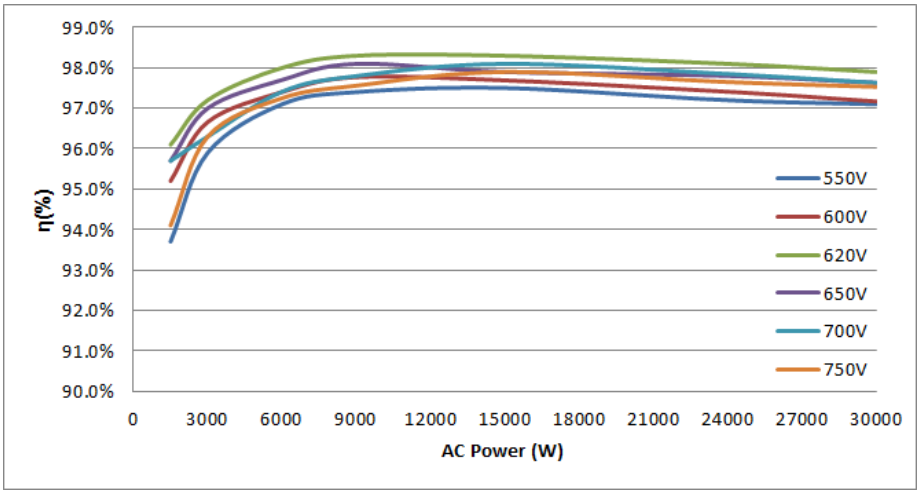

PV-40000T-U

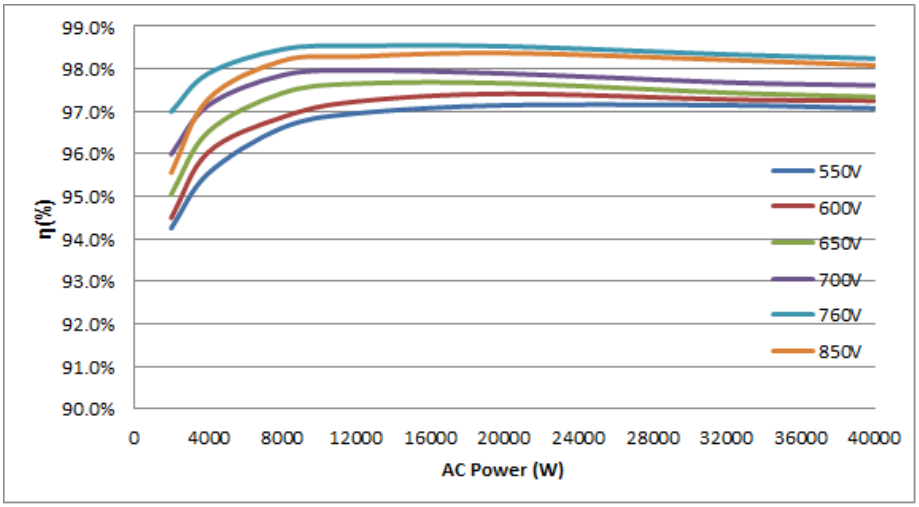
99.0%
98.0%
97.0%
96.0%
95.0%
94.0%
93.0%
92.0%
91.0%
90.0%
η(%)
0
4000
8000
12000
16000
20000
24000
28000
32000
36000
40000
AC Power (W)
550V
600V
650V
700V
760V
850V